BHAGYANAGAR GAS LIMITED

(BGL)

TENDER FOR
LAYING & CONSTRUCTION OF U/G STEEL P/L NETWORK IN HYDERABAD OF M/S BGL

OPEN DOMESTIC COMPETITIVE BIDDING

TENDER NO. – BGL/VCS/WORKS/2024-25/01

Dated : 13.03.2025

VOLUME II OF II: TECHNICAL

ENERGISING QUALITY

PREPARED AND ISSUED BY
VCS QUALITY SERVICES PVT. LTD.
NOIDA, INDIA

Digitally signed by RACHNA SHUKLA
Date: 2025.03.13 12:53:14 IST

MASTER - INDEX

SL.NO.	DESCRIPTION	PAGE NO.
1.	VOLUME – A (PIPELINE & PIPING)	03 - 1162
2.	VOLUME – B (TCP)	1163 – 1237
3.	VOLUME – C (CIVIL)	1238 – 1351

Digitally signed by RACHNA SHUKLA
Date: 2025.03.13 12:53:14 IST

VOLUME – A (PIPELINE & PIPING)

Digitally signed by RACHNA SHUKLA
Date: 2025.03.13 12:53:14 IST

INDEX

S.NO.	DESCRIPTION	PAGE NO.
1.	SCOPE OF WORK	05 - 55
2.	DATA SHEETS	56 – 87
3	PIPING MATERIAL SPECIFICATION	88 - 116
4.	STANDARD SPECIFICATION	117 - 877
5.	QUALITY ASSURANCE PLAN	878 - 954
6.	STANDARD DRAWINGS	955 - 1099
7.	APPROVED VENDOR LIST	1100 - 1161
8.	TPIA LIST	1162 – 1162

Digitally signed by RACHNA SHUKLA
Date: 2025.03.13 12:53:14 IST

ENERGISING QUALITY	**PROJECT NUMBER: C251151**	

SCOPE OF WORK (FOR PIPELINE LAYING)			Total Sheets		51
Document No.	C251151	00	PP	SOW	2001

BHAGYANAGAR GAS LIMITED

LAYING & CONSTRUCTION OF U/G STEEL P/L NETWORK IN HYDERABAD OF M/S BGL

C1	13.03.2025	ISSUED FOR BID	PS	AG	MK
REV	**DATE**	**DESCRIPTION**	**PREP**	**CHKD**	**APPR**

© Copy Right VCS Quality Services Pvt Ltd. All rights reserved
Digitally signed by RACHNA SHUKLA
Date: 2025.03.13 12:53:14 IST

CONTENT

1. INTRODUCTION 3
2. PROJECT BRIEF 3
3. PURPOSE 4
4. DEFINITION 4
5. WORK TENDERED 4
6. DETAILED SCOPE OF WORK 7
7. SCOPE OF SUPPLY 18
8. SCOPE OF WORK AND SCOPE OF SUPPLY FOR OTHER DISCIPLINES 28
9. OTHER CONDITIONS OF BID 29
10. AS BUILT DOCUMENTS 48
11. DOCUMENTS TO BE SUBMITTED AT TIME OF BIDDING 49
12. DOCUMENTS, SPECIFICATION, STANDARDS AND DRAWINGS 49

© Copy Right VCS Quality Services Pvt. Ltd. All rights reserved
Digitally signed by RACHNA SHUKLA
Date: 2025.03.13 12:53:14 IST

1. INTRODUCTION

BGL was incorporated to implement City Gas Distribution (CGD) projects in the erstwhile Andhra Pradesh region, which now includes Andhra Pradesh and Telangana. The company serves the geographical areas of Hyderabad, Vijayawada, and Kakinada. Furthermore, BGL operates 137 CNG stations in these cities across Andhra Pradesh and Telangana.

BGL has a CGD network comprising 2,478 km of MDPE pipeline and 183 km of steel pipeline and has provided 3,16,046 domestic connections, 365 commercial and 88 industrial consumers in its authorized geographical region.

VCS Quality Services has been appointed as Engineering Project Management Consultant by M/s BGL to provide engineering consultancy services.

2. PROJECT BRIEF

The brief scope of work covered in this bidding document broadly consist of Laying, Testing and Commissioning of 12", 10",6" and 4" NB dia. x 43.440 Km approx. long pipeline and associated facilities for transportation of Natural Gas for Hyderabad GA in the state of Telangana.

The brief scope of work includes supply of bulk materials (other than free issue), pipe laying work including but not limited to Construction Management, HSE & Quality Management, Survey, clearing of ROU, grading. Stringing, bending, welding, trenching, lowering, crossings. Tie-ins, NDT and destructive testing, backfilling, site restoration, hydrotesting, dewatering, drying, pre-commissioning, commissioning and Gas-in of pipeline of size 12",10",6" & 4" Dia. including construction / installation of related facilities at consumer ends & metering skids, SV Stations, tap-off station at various locations including associated Mechanical, Civil, Structural, Cathodic Protection at stations etc.

Total Scope of work has been divided into four (04) segments as mentioned below:

Segment	12"	10"	6"	4"	Total (in Meters)
Segment – 1 (KATEDHAN TO DRDO) (In Meters)	7800	0	400	1650	**9850**
Segment – 2 (DRDO TO LB NAGAR) (In Meters)	6700	0	400	3600	**10700**
Segment – 3 (MLV 13 TO PATANCHERUVU (In Meters)	7050	0	3460	1500	**12010**

© Copy Right VCS Quality Services Pvt. Ltd. All rights reserved
Digitally signed by RACHNA SHUKLA
Date: 2025.03.13 12:53:14 IST

Segment 4(BEERUMGUDA TO CHERUVU) (In Meters)	0	5720	3660	1500	**10880**
TOTAL					**43440**

3. PURPOSE

This Document is for the Detailed Scope of Work For Pipeline Laying and Shall Be Read In Conjunction With Particular Job Specifications, Technical Specifications, Schedule Of Rates (SOR) & Various Parts Of Bidding Documents Meant For The Execution Of The Proposed Natural Gas Pipeline Under Hyderabad GA for City Gas Distribution Project in the state Telangana.

4. DEFINITION

Where used in this document, the following terms shall have the meanings indicated below, unless clearly indicated by the context to this order

PROJECT	CITY GAS DISTRIBUTION PROJECT IN HYDERABAD GA
OWNER	BHAGYANAGAR GAS LIMITED
CONSULTANT	VCS Quality Services Private Limited (VCS) the party to act for and on behalf of OWNER for the Detailed Engineering Services and Project Management.
MANUFACTURER	The party, which manufactures and supplies equipment and services to the OWNER or to Contractor.
SOW	Scope of Work

5. WORK TENDERED

Work tendered as a part of this Bid document consists of supply of materials as required, laying/ installation of Steel Pipeline, testing, pre-commissioning of pipeline, drying, preservation and commissioning. The work includes installation of Steel pipeline and related piping works at sectionalizing valve stations and all associated mechanical, civil, architectural, structural, cathodic protection, electrical, instrumentation, telecom works at Stations along the route etc.

The brief scope of work includes supply of materials (other than free issue), pipeline laying work including but not limited to Construction Management, HSE & Quality Management, Survey, ROU management, clearing of ROU, grading, stringing, bending bending, welding (Manual), trenching, joint coating, lowering, crossings, crossings by HDD (wherever specified), Tie-ins, NDT and destructive testing, backfilling, laying of pipeline along-with OFC & HDPE ducts, TCP works, site restoration, hydro-testing, dewatering, swabbing, drying, nitrogen purging (as applicable), pre-commissioning, commissioning and Gas-in of pipeline including construction / installation of related facilities , all piping

© Copy Right VCS Quality Services Pvt. Ltd. All rights reserved
Digitally signed by RACHNA SHUKLA
Date: 2025.03.13 12:53:14 IST

works at Sectionalizing valve stations, Tap-off station & Injection points, etc. including associated Mechanical, Cathodic protection, Electrical works, Telecom works, Instrumentation, Civil works and Structural works at all stations.

This document shall be read in conjunction with Schedule of Rates, SCC, Technical specifications, standards, drawings and other documents forming a part of the Tender Document.

5.1. The details of proposed work are as under:

- Pipeline laying works including installation of SV Station, all valves, fittings, flow tee etc. & associated Piping works at SV stations. Pipeline work start after IJ at proposed Station. For details, refer P&IDS of the pipeline network attached with the Bid Document.
- Laying of approx. 43.440 Km of 12", 10", 6" an 4" O.D x 6.4 mm W.T. API 5L Gr. X-52 PSL-2 coated main pipeline including associated works.
- Entire works including installation of IJ, flow tee, all valves, equipment's, fittings, other facilities and all associated mechanical, civil (pavement & supports works at SVs), instrumentation, telecom, structural, and all other SV terminal works civil approach road, electrical works etc.
- Entire work of SV Stations with/ without future tap-off as specified in Drawings/ P&ID including installation of underground valves and blow down vents etc.
- Entire work of Isolation Valves as specified in Drawings/ P&ID including installation of underground valves & other associated facilities.
- Supply, Installation, testing of HDPE duct & OFC Cable along with Steel Pipeline in common trench.
- Installation, testing of MDPE pipeline along with Steel Pipeline in common trench of Steel Pipeline including construction of valve chambers.
- Installation of all Sectionalizing valve stations including construction of valve chambers along with all Mechanical, civil, structural, and electrical, instrumentation, telecom, etc.
- Crossings of road, rail, utilities, forest, underground pipelines and water crossings (minor water body, canal, nala / drain, waterways etc.) by Open cut, HDD and boring including crossing drawing and calculation for HDD.
- Carrying out all topographical and geo-technical surveys required for re-routing (If required any).
- Installation of Pipeline by Horizontal Directional Drilling (HDD) method, wherever required.
- Installation of pipeline by machine moling, wherever required.
- All works related to hydro-testing, dewatering, swabbing, drying and tie-in with adjoining pipeline/ terminal piping sections/parts including tie-in with the HDD sections.
- Pre-commissioning of the pipeline section and associated facilities.
- Commissioning assistance (as applicable) and Commissioning: Overall Commissioning of the pipeline including supply of Nitrogen for purging. Contractor shall also provide all assistance to owner during commissioning

© Copy Right VCS Quality Services Pvt. Ltd. All rights reserved

Digitally signed by RACHNA SHUKLA
Date: 2025.03.13 12:53:14 IST

- Idle time preservation by filling Nitrogen at a positive pressure of 2 bar (g) as per specification including supply of Nitrogen (if required)
- All works related to HDPE duct laying and optical fiber cable (OFC) blowing.
- Making all necessary arrangements to prevent rolling down of removed earth while grading and ROU clearance in hill side and steep slope areas. Stabilization of side hill faces to prevent landslides.
- Making necessary arrangements to prevent rolling down of pipes in steep slopes.
- Supply and installation of slope breaker as per specifications and drawings in steep slope areas, wherever required;
- Supply and Installation of trench breakers with 1:4 ratio of cement and sand in bags for slopes, stabilization of soil, stabilization of trench, wherever required and as directed by Owner / Owner's Representative.
- Excavation of National Highway /State Highway/others Road/canals etc. during laying of Pipeline and restoration of same to original condition on completion of the work to the satisfaction of Concern Authority.

5.2. CONSTRUCTION FRONTS

The Construction fronts shall be mobilized for as indicated below:

Pipeline Segment	**Details**
Segmen - I (Size 1t th 7.8 km) (Size 6" X Length 0.4 km) (Size 4" X Length 1.65 km)	KATEDHAN TO DRDO
Segmen - II (Size 1t gth 6.7 km) (Size 6" X Length 0.4 km) (Size 4" X Length 3.6 km)	DRDO TO LB NAGAR
Segmen - III (Size 1 t th 7.05 km) (Size 6" X Length 3.46 km) (Size 4" X Length 1.5 km)	MLV 13 TO PATANCHERUVU
Segmen - IV (Size 1t gth 5.72 km) (Size 6" X Length 3.66 km) (Size 4" X Length 1.5 km)	BEERUMGUDA TO PATANCHERUVU

Fully equipped, maintained and functional fronts (as mentioned above) are required to be mobilized by the Contractor to complete installation of facilities covered under each

© Copy Right VCS Quality Services Pvt. Ltd. All rights reserved
Digitally signed by RACHNA SHUKLA
Date: 2025.03.13 12:53:14 IST

section/part as a minimum. All the construction fronts shall work simultaneously. In addition, contractor shall deploy separate crews for rail, road, water crossings and restricted areas. Contractor shall also mobilize separate teams for mechanical works SV Stations.

5.3. Successful Bidder is required to submit detailed methodology for working in rainy season before start of the work.

5.4. Contractor shall adopt suitable method of construction/ execution of work for restricted ROU/ Common ROU and deploy adequate equipment & manpower etc. as required. CONTRACTOR shall provide complete details of manpower, equipment etc. to be deployed. Contractor shall mobilize and provide all equipment, manpower (skilled and unskilled), consumables and other resources and separate crew etc. for each front as required for the execution of the complete job defined herein.

5.5. For execution of the pipeline work in the narrow ROU space in forest areas, the CONTRACTOR shall consider the special requirements/ measures and shall deploy adequate amount of manpower and equipment for performing the work.

5.6. Mechanical, civil, architecture, structural, temporary cathodic protection, corrosion monitoring system, electrical, instrumentation, telecom works for the respective sections/parts shall be carried out as per relevant particular job specification provided elsewhere in the Bid document.

6. DETAILED SCOPE OF WORK

The Contractor's Scope of work for the pipeline shall consist of, but shall not be limited to, supply (as required), fabrication, installation, testing, swabbing, drying, EGP, pre-commissioning and commissioning of the proposed pipeline system including terminal piping works and hook-up works at terminals along with all associated mechanical, civil, architectural, structural, corrosion monitoring system, electrical, instrumentation, telecom, etc. All such works that are not indicated here below but are otherwise required to complete the work in all respects shall form part of Contractor's Scope of Work.

The scope indicated below shall be read in conjunction with Schedule of Rates as applicable, drawings, SCC, standards, specifications and other documents forming part of the Contract document.

The detailed scope of work pertaining to pipeline shall be in general but not limited to the following:

6.1. Main Pipeline

6.1.1. "Receiving and Taking-over" of COMPANY supplied externally corrosion- coated and bare line pipes of all thicknesses at Company's designated storage yard in presence of Company's representative. Transportation including loading, unloading, handling, stacking, hauling and stringing of pipes from Company's storage yards to Contractor's worksite(s)/ workshop(s)/ pipeline Right-Of-Use (ROU), including arranging all pipe trailers, cranes, arranging all necessary intermediate storage area(s) required thereof till the complete pipeline system is permanently installed.

COMPANY shall set up storage yards for coated and bare line pipes near pipeline ROU as defined subsequently in this document. The exact location of Company's storage yards shall be intimated to the CONTRACTOR at the time of award. In addition, COMPANY shall set up stores for all items other than line pipes as defined in scope of supply.

6.1.2. All construction works shall be carried out as per "Approved for Construction" drawings, procedures, specifications and applicable codes and standards. Any changes at site shall

© Copy Right VCS Quality Services Pvt. Ltd. All rights reserved
Digitally signed by RACHNA SHUKLA
Date: 2025.03.13 12:53:14 IST

also need prior approval from the Company and revision of drawings.

6.1.3. Carrying out inspection of COMPANY supplied line pipes and pipe corrosion coating at the time of receiving and taking-over for all defect etc. in the presence of Company's representative

6.1.4. Carrying out repairs (including supply of all materials required for repair) of line pipe and pipe coating not attributable to COMPANY which will include repair of all defects/damages occurring during transportation and/ or handling after receiving and taking over.

6.1.5. For pipes were cutting out involves more than 25mm from pipe ends, ultrasonic inspection shall be carried out at pipe ends for line pipe and including supply of all equipment's. Contractor shall take prior approval from Company for the agency engaged for carrying out ultrasonic inspection.

6.1.6. Loading, unloading, handling, stacking, storing and transportation to workshop/ work site of all materials (other than bare and corrosion coated line pipes) that may be used for the construction of pipeline system either supplied by COMPANY at their designated storage yard/ store and/ or by CONTRACTOR as the case may be. All Company supplied materials (other than line pipe) shall be issued to Contractor from Company's designated store.

6.1.7. Preparation of bevel end and coating edge of line pipes for welding.

6.1.8. Contractor shall incorporate the crossing details in the as-built alignment sheet after completion of work.

6.1.9. Carrying out all additional topographic and/ or geotechnical survey as required for local detours, detours at crossing locations and elsewhere during execution including preparing plan and profile drawings as directed by Engineer-in-Charge.

6.1.10. Geo-technical investigation and hydrological survey of all major water body crossings are being carried out by the Company and the same shall be provided to the contractors during execution of the contract. However, contractor shall verify the authenticity of the data provided during execution and if required, additional geo-technical investigation & hydrological survey shall be carried out by the contractors for HDD crossings without any cost and time implication. Geo-technical & topographical survey for all plots shall be carried out by the respective contractor during execution of the contract.

6.1.11. Carrying out thorough internal cleaning of all pipes to remove debris, shots, grits etc. to the satisfaction of Engineer-in-charge.

6.1.12. Mobilizing and providing all equipment's, manpower (skilled and unskilled), consumables and other resources etc., as required for the execution of complete work and thereafter demobilizing the same upon completion of work.

6.1.13. Obtaining all necessary approvals and work permits from concerned authorities having jurisdiction, as applicable for performing the work including shifting/ relocation and restoration of telephone/ electrical poles and underground pipes and other utilities etc., as required by local authorities and as directed by COMPANY. Contractor shall also obtain all necessary approvals and work permits from concerned authorities having jurisdiction for crossing underground utilities/ pipelines wherever encountered along the pipeline route.

6.1.14. Cutting/ uprooting of trees within ROU, counting the number and type of trees to be cut (before cutting) during pipeline laying works in presence of DFO/ concerned authorities keeping record thereof and handing over the cut trees as directed by concerned authorities/ COMPANY.

6.1.15. The Pipeline corridor shall be kept as narrow as possible at all times. The pipeline shall be

© Copy Right VCS Quality Services Pvt. Ltd. All rights reserved
Digitally signed by RACHNA SHUKLA
Date: 2025.03.13 12:53:14 IST

fully buried. Wherever possible vegetation along the center line of the pipe shall be uprooted carefully, with soil and roots intact, so that it can be used in the reinstatement. During the excavation of the pipeline, trench top soil and subsoil material shall be kept separate and backfilled in the same order where possible imported backfill material shall be avoided and a selective backfill method used. The Trench shall be opened and closed as quickly as possible. Safe exit routes/ramps from the trench shall be provided for wildlife if a trench is left open overnight. The Pipeline shall not alter the drainage characteristic of the land. Clay Stopper bungs will be used as required.

6.1.16. Staking, clearing, grading of Right of Use (ROU) as required, trenching to all depths in all types of soils including soft and hard rock, including blasting, controlled blasting, chiseling, or otherwise cutting etc. to a width to also accommodate the OFC/ cable conduit as per relevant standards, drawings, specifications etc., stringing, aligning, bending, welding, NDT by AUT/X-ray, field weld joint coating including supply of all materials, protective coating of long radius bends and buried fittings/ valves including supply of materials, providing sand/ soft soil padding, rock shield in the trench wherever required including supply of sand/ soft soil, laying and lowering of the pipeline including locating existing pipeline using pipe locator, wherever applicable and maintaining the specified minimum spacing from existing pipeline(s), back filling including supply of select backfill material where required, carrying out rail, road, river, canal, drain, utility and submerged minor and major water course crossings including installation of carrier pipe inside casing pipe at cased crossings wherever required, providing two component epoxy coating on inner surface of casing pipe wherever required by statutory authority, bank stabilization of water course crossings as required, arranging all additional temporary land/ area required for construction purposes. Supply and installation of anti-buoyancy measures viz. continuous concrete coating, geo-textile gravel filled bags, saddle weight, extra cover, select backfill etc. on pipeline, installation of supports wherever required, tie- in/ hook-up with pipeline/ piping installed by others including cutting of temporary test headers, if any, re-beveling, NDT, fit-up, welding, radiography etc.; clean-up, ROU restoration, pigging, flushing, gauging, hydrostatic testing with the quantity of corrosion inhibitor as required, dewatering with the addition of approved chemicals to neutralize the effect of inhibitor added during hydro test at required dosage, swabbing, drying, pre-commissioning and commissioning of pipeline including supply of all materials such as required type and quantity of pigs, manpower, equipment, consumables and carrying out all associated works as per relevant specifications, standards and approved drawings enclosed with the Contract document.

6.1.17. All welding and NDT shall be carried out as per welding specification and as per welding specification charts enclosed in the bid document.

6.1.18. Welding Techniques & NDT

Sl. No.	Description	Welding Technique	NDT
1	12” x 6.4 mm, API 5L Gr. X-52	Manual	X-Ray
2	10” x 6.4 mm, API 5L Gr. X-52	Manual	X-Ray
3	6” x 6.4 mm, API 5L Gr. X-52	Manual	X-Ray
4	4” x 6.4 mm, API 5L Gr. X-52	Manual	X-Ray

© Copy Right VCS Quality Services Pvt. Ltd. All rights reserved
Digitally signed by RACHNA SHUKLA
Date: 2025.03.13 12:53:14 IST

Notes:

a) Pipeline welding may be carried out as mentioned above.

6.1.19. Welding of all tie-in joints including tie-in joints and bends on either side of major river/ canal/ road/ rail crossings/ other facilities as required including adjoining pipeline spreads, cutting of test header, re-beveling and tie-in with adjacent pipeline segments.

6.1.20. Carrying out welding including cutting, edge preparation (inclusive of grinding the edges of pipe, fittings, flanges, etc. to match with the matching edges of different thickness wherever required), fit-up, bending, pre heating wherever required, NDT including radiography and other non-destructive tests as specified. NDT requirements for process and other piping shall be in accordance with relevant specifications enclosed with the Bid document.

6.1.21. Transportation of bare pipes or Coated Pipe, removing of 3LPE coating, fabrication, supply, installation and coating of LR Bend as per requirement of pipeline route.

6.1.22. Corrosion coating of long radius 3D bends by heat shrink sleeve as per specification.

6.1.23. Field weld joints coating and corrosion coating of Long Radius (LR) bends and pup pieces of sectionalizing valves by Heat Shrink Sleeve. 100% solid high build epoxy (minimum 500 micron thk.) shall be applied for underground piping & valves.

6.1.24. Installation of all in-line insulating joints, valves, appurtenances, online instruments etc.

6.1.25. Providing slope breakers in steep slope areas including supply of all materials, wherever required. Contractor shall carry out slope breaker survey and slope breaker shall be installed (before backfilling) as per standard after approval of Engineer-In- charge. Supply and installation of slope breaker as per specification and drawing in slightly undulating areas (having slope 6° to < 20°); slope stabilization as per specification and drawing in highly undulating areas (having slope ≥ 20°)

6.1.26. Sand/soft soil padding of minimum 150 mm thickness around pipe wherever required in areas where trenching has been done in rock or gravel or pebble or murram or hard soil including supply of sand/ soft soil. The pipeline trench shall not be filled with gravel and large stones or boulders. Supply and installation of rock-shield in addition to 150 mm of sand/soft soil padding around the pipe in rocky areas. The rock shield (polyethylene mat) shall be of minimum 6 mm thick or as approved by CLIENT/PMC and same shall be as per COMPANY specifications. Contractor shall furnish all details of proposed rock shield to be used, for COMPANY's approval. Extra digging of trench shall be carried out to comply with above requirements & to provide minimum cover (as specified) over pipeline within Quoted rates and with no additional Cost to Company.

6.1.27. Providing engineered select backfill consisting of loosely compacted cohesion less soil like sand (for the areas prone to seismic activity) including supply of cohesion less soil like sand for a distance of 500 m on each side, as per job standards. The pipeline shall be surrounded by at least 0.6 m of select backfill. Extra digging of trench shall be carried out to comply with above requirement.

6.1.28. The list of crossings indicating crossing methodology is enclosed. However mentioned crossing methodology for respective crossing may vary depending upon site conditions during time of execution. In case of such situation, Client /PMC has reserve right to inform contractor about revised crossing methodology to be adopted. The payment will be regulated based on the actual crossing methodology executed as per relevant SOR item.

6.1.29. Carrying out National highway /State Highway, Expressway, railways and major road crossings by conventional/ boring/ Jacking/ HDD method.

© Copy Right VCS Quality Services Pvt. Ltd. All rights reserved
Digitally signed by RACHNA SHUKLA
Date: 2025.03.13 12:53:14 IST

6.1.30. Supply & Installation of 168 mm (6") CS conduit for OFC cable, HDPE for all crossings with HDPE sub ducted in CS conduit (with proper end-sealing and arrangement of wire/etc. for pulling OFC) (if required).

6.1.31. Supply and Installation of warning mat over entire pipeline, and covering widthwise complete Pipeline and OFC duct as per relevant specification & drawings. Warning mat shall be laid above the top of pipeline at a distance as specified in drawings.

6.1.32. Qualifying Procedure for cold field bending of pipes, Making and handling of cold field bends at site as per the specification, as required for laying of pipelines and crossings is in the scope of contractor.

6.1.33. Providing all necessary barricading material, safety signboards, warning lights etc. to safeguard the pipeline against accidents during construction of line in city area.

6.1.34. Localized purging/ inertisation including supply of nitrogen during hook up with existing Pipeline/ piping at existing terminal, if any.

6.1.35. Loading, unloading, handing over and transportation of all surplus COMPANY supplied free issue materials including line pipe to COMPANY designated stores and stacking of the same. Stacking of surplus pipe & other material shall be inclusive of supplying of sand bags etc.

6.1.36. Return of surplus material/ bends etc. to storage yard/ work site/ Company's store shall be in Contractor's scope.

6.1.37. Carrying out cleaning, flushing, swabbing (as applicable), dewatering, testing and pre-commissioning of pipeline and associated facilities at Dispatch Station, Sectionalizing Valve Stations & Receiving terminal up to the respective battery limits. Locating all major and minor leaks during hydro-testing, if any.

6.1.38. Repair of leaks/ burst, not attributable to Contractor, occurring in Company supplied material, shall be carried out by the contractor and the Contractor shall be compensated as per provisions of the contract. However, Contractor shall carry out repair of defects attributable to Contractor at no extra cost to Company. Contractor shall submit a report for failure to Company.

6.1.39. Commissioning of pipeline & associated facilities providing all equipment's, manpower, machinery, consumables including required number of pigs and assistance as required during commissioning of pipeline system and associated facilities viz. Dispatch Terminal, Sectionalizing Valve Stations and Receiving Terminal up to the respective battery limits.

6.1.40. Final clean-up and restoration of ROU and other conveniences like temporary approach roads/ temporary works, barren land, road, rail, canals, water crossings, cultivable land etc. to original condition as per specification and drawings to the entire satisfaction of COMPANY and/ or authorities having jurisdiction over the same, including disposal of surplus construction materials to Company's designated stock yard(s) or as directed by Engineer-in-charge. CONTRACTOR shall restore stones laid to mark the boundaries of adjoining fields to original conditions. Contractor shall arrange necessary clearance from all concerned authorities/ land owners to the effect that ROU has been restored back to the original condition.

6.1.41. Disposal of surplus excavated soil from trench outside ROU.

6.1.42. Idle time preservation by filling Nitrogen at a positive pressure of 2 bar (g) as per specification, if required including supply of Nitrogen.

6.1.43. Preparation of as-built drawings, pipe-books, documents, photographs and project records

© Copy Right VCS Quality Services Pvt. Ltd. All rights reserved
Digitally signed by RACHNA SHUKLA
Date: 2025.03.13 12:53:14 IST

as per specification and instructions of the COMPANY including furnishing of all Test Certificates/ Inspection Reports for all materials used for permanent installation. Taking over Crossing details from HDD agency (in case of separate agency) and completion of all as-built drawings, project records, pipe book etc. shall be in laying contractor's scope of work.

6.1.44. Taking over surplus bare and coated pipe from coating contractor at storage yard after completion of work, loading, unloading, transportation and handing over of all surplus Company supplied free issue material including short length of pipes to Company's designated Storage yard as directed by Engineer-in-charge.

6.1.45. In case any activity though not specifically covered in schedule of rates description but same is covered under scope of work/ Specification / drawings, it is understood that the contractor shall do such performance & provisions so mentioned without any time & cost implication.

6.1.46. Installation of casing pipes (by open cut/jacking/ boring/ any other trenchless technique) assembly, including supply of all materials, casing insulators and end seals, vents and drains etc. complete, at cased crossings.

6.1.47. Supply of HDPE duct for laying of OFC as required.

6.1.48. Providing loosely compacted cohesion less soil like sand, murrum, silty sand for specified distance in seismic prone areas.

6.1.49. Crossings of streams/canals/Nala by Open Cut or as specified in Crossing Methodology

6.1.50. Pre-construction surveys, preparation of detailed construction method statement and calculations for Company's approval.

6.1.51. Geo-technical investigations, if required.

6.1.52. Site preparation, arranging required land for setting up of string fabrication yard and obtaining necessary permissions from concerned authorities.

6.1.53. Preparation of pipeline Launch way, continuous concrete coating of pipes, repair of damages to corrosion and concrete coating, string preparation, field welding, NDT including radiography, pretest of completed strings, corrosion and concrete coating of field joints, trenching, laying at approved depth, backfilling including supply of select backfill material (where required), stabilization of banks, post installation hydro test, capping, providing and installing of markers, etc.

6.1.54. Installation of HDPE conduit, laying of OFC inside the conduit. Contractor shall install pipeline and HDPE conduit together in river crossings and HDPE conduit shall be strapped using corrosion resistance straps to the main pipeline in the top quadrant. Stability of the combined installation shall be ensured (if required).

6.1.55. HDD works shall be carried out in accordance with specification enclosed with bid package. For directionally drilled crossing, following shall be performed:

a) Carrying out all surveys and collection of data, as may be required for the design and construction of the crossings.

b) Carrying out all engineering, design calculations and preparing all construction drawings for laying of pipeline and optical Fibre cable inside steel pipe as per requirements for installation of river crossings by HDD method. Contractor shall prepare crossing drawing & calculation and submit all for approval work will start only after Approval from PMC/ Client

© Copy Right VCS Quality Services Pvt. Ltd. All rights reserved
Digitally signed by RACHNA SHUKLA
Date: 2025.03.13 12:53:14 IST

c) All construction activities required for installation of the crossings viz. site preparation, preparation of pipe string, repair of damages to corrosion coating, field welding, NDT including radiography, pretest of completed string, corrosion coating of field joints, holiday testing of complete pipe string, drilling in all types of soil including gravel, boulders and disintegrated and hard rock, installation of pipeline, post installation hydro-testing of the crossing section, capping, providing and installing markers at crossings.

d) After the successful completion (Pulling) of HDD for final acceptance gauging to be carried out.

e) Field joint coating shall be carried out by using approved sleeves.

f) Supply of duct of flexible HDPE/plastic corrugated tubing for laying of OFC cable, preparation of steel conduit string and corrosion coating of weld joints.

g) Installation of pipeline and 6" NB steel conduit for OFC if required (together in a single drilled hole or separately in two independent drilled holes as Approved by EIC).

h) Tie-in with main pipeline after successful installation of pipeline at river crossing.

i) All associated pipeline work w.r.t. temporary Cathodic protection.

j) Testing and jointing of OFC at either ends with OFC in main pipeline trench.

k) Contractor shall dispose bentonite slurry safely as per technical specification and environmental requirements as applicable.

6.1.56. Clean-up and restoration of ROU and other conveniences like road, rail, canals, cultivable land, water facilities, irrigation facilities, boundary wall/fence etc. to original condition as per specification and drawings to the entire satisfaction of Company and/or Authorities having jurisdiction over the same, including disposal of surplus excavated soil and other construction materials to a location identified by Contractor approved by local authority without causing any disturbance to environment and to the entire satisfaction of Company.

6.1.57. Contractor shall arrange necessary clearance from the concerned authorities/ land owners to the effect that ROU/ ROW has been restored back to original condition. Contractor shall carry out joint survey with representative of Competent Authority (CA) and will obtain clearance in writing from CA that ROU has been restored to original condition. Necessary clearance from statutory authority / NOC for restoring the ROU to original condition shall be in Contractor's scope. Necessary proof of restoration i.e. through photographs and video recordings will have to be submitted by the contractor where ever NOC is not available.

6.1.58. Supply and installation of all types of pipeline markers including their painting suitable for and Normal/Highly/Costal/marine corrosive environment (as specified in Design Basis) and all associated civil works. Location of markers shall be as per specification/ standards and as directed by Engineer-in-Charge. If Corrosive environment is not defined then stringent requirement of above-mentioned corrosive environment shall be followed.

6.1.59. Installation of all inline/ online instruments/ valves/ insulation joints/ appurtenances etc. as per requirements of approved drawings

6.1.60. Tie-in with the pipeline at rail, road, river and other crossings including cutting of test headers as required and tie-in with terminal piping & with existing facilities as applicable.

6.1.61. At all pipeline tie–in locations, the trench shall be excavated further wherever possible and permanently lubricated HDPE duct shall be laid away from the pipeline to avoid damage to the HDPE conduit and to the pipeline.

6.1.62. Preparation of video films with audio commentary covering all aspects of pipeline

© Copy Right VCS Quality Services Pvt. Ltd. All rights reserved
Digitally signed by RACHNA SHUKLA
Date: 2025.03.13 12:53:14 IST

construction annotated as required, conversion of the same to video CD/DVD ROM format and USB, submitting three (3) sets of the same.

6.1.63. All incidental and associated works and any other works not specifically listed herein but are required to be carried out to complete entire work related to pipelines and the associated facilities and making the entire pipeline system ready for operation.

6.1.64. Repair of any leaks/burst occurring during testing of main pipeline.

6.1.65. Installation of carrier pipe in canal/ road (NH/ Express highway)/ railway crossings by boring/ HDD/ Trench less method, as directed by Company. Whenever HDD/Trench less method is to be adopted for pipeline installation, the same shall be carried out as per specification. Contractor to note that the minimum elastic bend radius to be adopted, shall be as per pipeline engineering design basis enclosed with the tender.

6.1.66. Any other works not specifically listed herein but are required to be carried out to complete entire work related to pipelines and the associated facilities.

6.2. ASSOCIATED WORKS FOR PIPELINE CONSTRUCTION

6.2.1. Installation of CS casing pipes (by open cut/ jacking/ boring) assembly, including transportation & supply of all materials, viz. CS casing Pipe, casing insulators and end seals, vents and drains etc. complete, at cased crossings. In case, coated casing pipe is supplied as free issue material, then the contractor shall remove coating before installation.

6.2.2. Cased crossings shall be installed at locations as per instructions of Engineer in- charge. The number of crossings indicated in alignment sheets is subject to change based on engineering, construction and statutory requirements or the requirements of the authority having jurisdiction over a utility crossing.

6.2.3. Supply and installation of all types of pipeline markers including their painting suitable for Normal/Highly/Costal/marine corrosive environment (as specified in Design Basis) as per specification and all associated civil works. If corrosive environment is not defined then stringent requirement of above-mentioned corrosive environment shall be followed.

6.2.4. Tie-in/ hook-up of pipeline at Dispatch / Receipt Terminal / SV Stations/ and existing facilities, if any, is in the scope of Contractor.

6.2.5. Laying Contractor shall engage underground Scanning agency for finding out the location and depth of underground utilities particularly residential and other areas in consultation with Engineer In charge/ Client and Concerned Authorities.

6.2.6. Contractor shall also inform all local authorities in advance and obtain all necessary approvals for crossing underground utilities/ pipelines wherever encountered along the pipeline route. Contractor shall be required to carry out all the works as mentioned in the work permit.

6.2.7. Owner Reserve the right to award part of the work to Contractor. Or Contractor Performance is not found satisfactory owner reserve the right to award part of Contractor work to others.

6.2.8. Bidders shall also be responsible for Collaborate, Cooperate, co-ordination and communication for smooth execution completing the site work from respective statutory authorities i.e., PWD, NHAI, SH, Railway, Nagar Nigam, Local authorities, Forest/ central forest etc.

6.2.9. Wherever advised by owner, Collaborate, Cooperate, co-ordination and communication for smooth execution completing the site work for clearance from Statutory Authorities

Format: C251151-00-FMT-001_00 © Copy Right VCS Quality Services Pvt. Ltd. All rights reserved
Digitally signed by RACHNA SHUKLA Date: 2025.03.13 12:53:14 IST

including regular follow ups and obtaining the clearance shall be done by Contractor. Client will issue introductory letter for applying and for submission of demand note raised by statutory authorities. Contractor shall do the follow up with the concerned authorities to get the clearance to execute the job in time.

6.2.10. Contractor shall provide schedules, progress reporting, organization chart at construction site, quality assurance plan and developing quality control procedures, as per requirements of the bid package.

6.2.11. Contractor shall be responsible for payment of claims if any arising out of damage/ obstruction to public utilities like OFC lines of DOT, water pipelines etc. where the claims will cover the restoration costs as well as loss of revenue due to down time. Owner may deduct cost of such claims from contractor's bill to settle such claims.

6.2.12. Providing all equipment's, manpower, machinery, consumables, apparatus, tools and tackles for fabrication, installation, inspection, testing, pre-commissioning and commissioning complete as required including facilities for inspection and interpretation of testing results by Company/Company's Representative personnel; providing all types of safety tools, tackles, devices and apparatus, equipment etc.

6.2.13. Co-ordination and supervising the work of Approved sub-Contractors.

6.2.14. Transportation of appropriate materials to worksite, intermediate storage points, maintaining and operating an adequate material control procedure at worksite.

6.2.15. Fabrication of all piping, structural components as per approved drawings.

6.2.16. All associated civil, structural,; HDPE duct laying and telecom works shall be performed in accordance with relevant specifications and requirements enclosed elsewhere in the bid package.

6.2.17. Contractor shall depute independent third-party inspector for carrying out radiographic inspection and interpretation of radiograph of welds. Third party inspector shall be approved by Company.

6.2.18. Provide, maintain and operate all temporary facilities required for the construction related works and remove after completion of work.

6.2.19. Hook up/tie-in of pipeline and piping system with terminal facilities.

6.3. Piping Works at Tap- off Points and Sectionalizing Valve Stations.

Facilities to be installed at various sectionalizing Valve (SV) Stations, as a part of overall pipeline system are shown in respective Piping & Instrumentation diagrams (P&IDs) enclosed.

a) Tap- off Points/ SV Stations/Isolation Valves

- Preliminary typical drawings and P&ID for the SV/tap-off stations are enclosed with this Bid. These drawings are indicative only and are enclosed to enable the Contractor to understand the nature of work involved. Issued for Construction (IFC) Drawings shall be progressively furnished to the Contractor, at an appropriate time at project execution stage.

- Contractor shall carry out all works strictly in accordance with the Issued for Construction (IFC) drawings and reference specifications/ standards, documents, data sheets etc. enclosed with this Bid document and instructions of Company/ Engineer- in-Charge and other provisions of Bid document.

© Copy Right VCS Quality Services Pvt. Ltd. All rights reserved
Digitally signed by RACHNA SHUKLA
Date: 2025.03.13 12:53:14 IST

- The Contractor's Scope of Work for the work tendered shall consist of, but not be limited to, supply (as indicated in Scope of Supply), installation, testing, pre-commissioning and commissioning of terminal piping complete, with all associated mechanical, civil, architectural, structural, corrosion monitoring system, electrical, instrumentation, telecom, etc. as applicable including all such works which though specifically not indicated here but will otherwise be required to complete the work in all respects.

- The scope indicated below shall be read in conjunction with Schedule of Rates as applicable, drawings, standards, specifications and other documents forming part of the Contract document.

6.3.1. "Receiving and Taking over" as defined in specifications of all Company supplied materials including equipment from the Company's designated place(s) of issue defined elsewhere, transportation including loading, unloading, handling from Company's designated place(s) of issue to Contractor's own stock yard(s)/ work site(s)/ workshop(s), including arranging all necessary intermediate storage area(s) thereof till the materials are installed in permanent installation.

6.3.2. Procurement and supply of all materials, equipment's that are included in the scope of supply of Contractor, transportation of all materials from manufacturer's works including loading, unloading, handling, storing and transportation to work site(s)/work shop(s) including arranging all necessary intermediate storage area (s) thereof, as required.

6.3.3. Fabrication, erection, testing of all above-ground/ buried piping system including installation pipes, valves (manual and remote actuated), flanges, fittings, flow tees, , insulating joint etc.; carrying out all applicable works associated with buried pipeline within the SV station ,carrying out welding, NDT including radiography; weld repairs/ retesting, cleaning/ flushing hydro testing, dewatering, functional testing, cutting of mainline and beveling (if required), excavation in all types of soil for installation of piping and pipe supports, pre-commissioning, providing commissioning assistance(wherever required) and commissioning including supply of all materials and manpower that are required during pre-commissioning and commissioning and all associated works.

6.3.4. Installation of Sectionalizing Valve stations in all terrains/ soils including all above ground/ underground piping at all elevations and depths including all civil works, viz. filling and compaction of valve station areas, excavation of pits, gravel filling, construction of supports, foundations, construction of access road to installation from nearest metaled road, installation of all valves and valve actuators and all fittings/ piping works.

6.3.5. Preparation of isometrics and/or fabrication drawings required for the purpose of fabrication during execution of work.

6.3.6. Obtaining all necessary approvals and work permits from concerned local authorities having jurisdiction including hot work permit as applicable for performing the work in existing terminal facilities. Arranging of adequate fire-fighting equipment viz. fire brigade, fire extinguisher, shielding from existing facilities, oxygen mask etc. for carrying out the work safely to the satisfaction of COMPANY.

6.3.7. Carrying out welding including cutting, edge preparation (inclusive of grinding the edges of pipe, fittings, flanges, etc. to match with the matching edges of different thickness wherever required), fit-up, bending, pre heating wherever required, NDT including radiography and other non-destructive tests specified. NDT requirements for process and other piping shall be in accordance with relevant specifications enclosed with the Contract document.

© Copy Right VCS Quality Services Pvt. Ltd. All rights reserved
Digitally signed by RACHNA SHUKLA
Date: 2025.03.13 12:53:14 IST

6.3.8. Installation of all types of valves (manual/ actuated), all types of inline/ online instruments such as PSVs (other than those covered separately), safety valves, tapping for thermowells, sample connections, pressure gauges, corrosion monitoring system etc. for all sizes and ratings including fixing of gaskets, bolts, studs and nuts of all sizes, ratings and materials.

6.3.9. Installation of all in-line and on-line instruments including Skin Temperature measurement assemblies.

6.3.10. All works for corrosion monitoring system (CMS) system as described in relevant document enclosed elsewhere with Bid document.

6.3.11. All associated civil works, viz. levelling, filling and compaction of station areas as required, necessary stone pitching at the sides of earth fill (if required), excavation of pits, gravel filling, paving as required, access road to installation from nearest metaled road, etc.

6.3.12. All associated structural and mechanical works including supply of all materials required, unless covered separately elsewhere in the Bid document, including construction of foundations (PCC/ RCC works) for equipment's and pipe supports and sleepers, fabrication and erection of supporting structural elements for piping such as shoes, clamps, anchors, guides, insert plates, brackets, structural column, valve operating platforms, pipe crossovers etc. Contractor shall provide grating as per details currently included in the tender document or as per details furnished subsequently.

6.3.13. Supply of bolts, nuts, gaskets, washers, U bolts, clamps, clips, gaskets for supports for all piping works.

6.3.14. Supply, fabrication and erection of supporting structural elements for piping such as shoes, clamps, anchors, guides, insert plates, brackets, structural column etc.

6.3.15. All associated structural, instrumentation, telecom, mechanical and civil works including supply of all material required, covered separately elsewhere in the Bid document.

6.3.16. Hook-up of piping with equipment's and vessels and hook-up of all piping at the battery limit with the pipeline/ piping including cutting of temporary test header, re- beveling, NDT, fit-up, welding, radiography etc. including interface/ coordination as required with other Contractor(s)/Agencies.

6.3.17. Painting of above ground piping (including supply of materials), structural steel elements, for pipe supports, all equipment's and all related miscellaneous items as required and as directed by Engineer-in-charge. Paint shall be suitable for highly corrosive environment in accordance with specification. Wherever touch up/ repair of primer is required, high build epoxy zinc phosphate primer shall be used

6.3.18. Protective coating of 100% solid high build epoxy minimum 1000 micron thk. (powercrete R95) for all underground piping, valves, fittings, etc.

6.3.19. Corrosion protection coating of all field weld joints for buried piping of all sizes including supply of all materials.

6.3.20. Cleaning, Hydro testing, dewatering and drying of piping system of all sizes as per specifications enclosed.

6.3.21. Final clean up and restoration of site, facilities etc. as per the requirement of COMPANY/ Engineer-in-Charge including filling (wherever required) and grading of areas around stations for avoiding any local flooding of area.

6.3.22. Transportation and stacking of all surplus COMPANY supplied free issue material to Company's designated store after completion of works or as directed by Engineer-in-

© Copy Right VCS Quality Services Pvt. Ltd. All rights reserved
Digitally signed by RACHNA SHUKLA
Date: 2025.03.13 12:53:14 IST

Charge.

6.3.23. Preparation of as-built drawings, documents and project records as per instructions of Engineer-in-Charge.

6.3.24. Preparation of detailed procedures for fabrication, installation, testing, pre- commissioning and commissioning. Such procedures shall be submitted to COMPANY/ Engineer-in-Charge for review and approval.

6.3.25. Obtaining all statutory clearances, approvals, permissions and hot work permit for the works as required.

6.3.26. Fabrication and erection of piping supports and change of existing support/additional supports installed by others as directed by Engineer-in charge.

6.3.27. Idle time preservation of mainline and terminal piping by nitrogen gas with positive pressure 2 bar (g) for specified period.

6.3.28. Any other works not specifically listed herein but required for completion of the works in all respects.

6.3.29. All construction works shall be carried out as per "Issued for Construction" drawings, procedures, specifications and applicable codes and standards. Any changes at site shall also need prior approval from the COMPANY and revision of drawings.

6.4. Temporary Cathodic Protection Works

Temporary Cathodic Protection works shall be carried out as per the scope detailed in particular job specification enclosed elsewhere with the tender.

6.5. Civil, Architecture & Structural Works

Civil, Architecture & Structural works shall be carried out as per the scope detailed in particular job specification enclosed elsewhere with the tender.

7. SCOPE OF SUPPLY

7.1. Materials to be supplied by COMPANY as Free Issue

Company shall supply the following Pipeline/ Terminal piping materials required for permanent installation to the Contractor at an appropriate time during the execution stage as free issue materials:

a) 3LPE externally Coated, API 5L Gr. X-52 PSL2 Steel Line Pipe.

- Entire required quantity of coated line pipes of all thickness shall be supplied by Company. Line pipes (coated) shall be made available to the Contractor at designated storage yards. Transportation of the line pipe from designated storage yards in to work site shall be in the scope of the CONTRACTOR. Further the CONTRACTOR has to ensure safe storage.

- Bare Line Pipes API 5L Gr. X-52 shall be used for above ground piping section by the respective part Contractor. Contractor can use the Coated Pipe after removal of coating & painting the same with approved painting Scheme.

- The quantities of coated and bare line pipes indicated in the bid document are approximate and may vary. The exact quantity shall be intimated to the Contractor after award of work.

Format: C251151-00-FMT-001_00 © Copy Right VCS Quality Services Pvt. Ltd. All rights reserved
Digitally signed by RACHNA SHUKLA
Date: 2025.03.13 12:53:14 IST

- Contractor to note that it is the responsibility of installation contractor to return surplus pipes to the COMPANY designated storage yard as per instructions of Engineer In-Charge after completion of installation works.
- Receiving and taking over of coated line pipes at Storage yard including its inspection. All trucks / trailers for transportation of line pipes from storage yards to site/ ROU/ Contractor's storage Yard shall be supplied by contractor.
- Contractor shall note the exact location of Pipe Storage Yards shall be intimated to the Contractor at the time of award. Contractor shall be responsible for performing all works as per scope of work at the finally selected storage yard location by the COMPANY at no extra time / cost to the COMPANY.
- Contractor shall note that Chainage indicated for SVs are approximate and may vary based on the availability of land and NH/ SH/ Rail approach. The exact location of SV stations shall be intimated to the Contractor at the time of award or during execution of work. Contractor shall be responsible for performing all works as per scope of work at the finally selected SV locations by the COMPANY at no extra time/ cost to the COMPANY.
- Transportation of pipes and other free issue material from place of issue is in Contractor's scope. Contractor shall note that the prices indicated in the Schedule of Rates shall be inclusive of taking the delivery and transportation of line pipes and other material from the above storage yard/ stockyard to work place(s).
- Bevel Protectors of the line pipes shall be the property of the pipeline installation Contractor. He has to collect and dispose off the bevel protectors. Contractor shall quote accordingly.

b) Metallic Valves (ball, plug, globe etc.) of size 4" and above

- Wherever required, actuators shall be supplied along with valves

The Company shall make above free issue materials available at the Client store.

Contractor shall arrange all trucks/ trailers, cranes etc. for transportation of above materials including loading at Company store, unloading at contractor's storage yard/ work site, arrangement of cranes, handling etc.

Contractor shall return all surplus material to company designated storage yard as decided by Engineer- In- charge.

7.1.1. Conditions for COMPANY Supplied Material

1. The Contractor shall be responsible for taking over of the material and subsequent handling, hauling, transportation to the actual work site(s)/fabrication yard(s) and storage & safe keeping of the materials. Contractor shall arrange all equipment/ cranes etc. for loading of these materials on their truck/trailers for transportation except line pipe.

2. The Contractor shall inspect all COMPANY supplied free issue materials at the time of

Format: C251151-00-FMT-001_00 © Copy Right VCS Quality Services Pvt. Ltd. All rights reserved
Digitally signed by RACHNA SHUKLA Date: 2025.03.13 12:53:14 IST

taking over from the COMPANY and defects noticed, if any, shall be brought to the notice of COMPANY/ COMPANY representative and jointly recorded. Once the material has been taken over by the Contractor, all the responsibility for safe keeping of the materials shall rest with the Contractor.

3. Every month the Contractor shall submit to the COMPANY an account for the material issued to the Contractor in the Performa prescribed by Engineer-in- Charge.

4. On completion of the works, Contractor shall submit a "Material Appropriation Statement" for all materials supplied by the COMPANY as free issue materials.

5. The scrap allowances shall be permissible as per the provision of Bid document. The percentage allowance shall be accounted on the basis of actual consumption as incorporated in the work.

6. All unused and scraps material shall be the property of the COMPANY and shall be returned by Contractor to COMPANY at COMPANY's designated storage point(s) including transportation of the same from Contractor's stock yard(s)/worksite(s)/work shop(s) to the COMPANY's designated storage point(s). Contractor shall be responsible for the proper measurements of the unused/ scrap materials to be returned to the COMPANY.

7. Rebuffing of dents in bevels less than 1 mm in depth shall be carried out by Contractor ahead of welding in the field at no extra cost to Company.

8. For the purpose of accounting of pipes all cut pieces in length of 2 m and above when returned to the Company's storage point shall be considered as serviceable material. All pipes measuring less than 2 m shall be treated as scrap/wastage.

9. All unused pipes and serviceable/ scrap material shall be the property of the Company and shall be returned by Contractor to Company at Company's designated storage point(s).

7.2. Materials to be supplied by CONTRACTOR

The procurement and supply, in sequence and at appropriate time and place, including inspection and expediting, of all materials and consumables required for completion of the work as defined in this bid document except the materials specifically listed under para 7.1 above as COMPANY free issue material, shall be entirely the CONTRACTOR's responsibility and the item rates quoted for the execution of the WORK shall be inclusive of supply of all these materials. All materials supplied by the CONTRACTOR shall be strictly in accordance with the requirements of relevant COMPANY material specifications enclosed with the Contract document. All equipment's, materials, components etc. shall be new and specifically purchased for this job from Company approved vendors, duly inspected by third party inspection agency (shall be 3.2 certified-) along with manufacturing certificate for relevant pressure containing equipment/ materials/ parts/ components etc. For other contractor supplied equipment/ materials/ parts/ components, contractor has to submit test certificate as per technical specification/ applicable codes/ approved

© Copy Right VCS Quality Services Pvt. Ltd. All rights reserved
Digitally signed by RACHNA SHUKLA
Date: 2025.03.13 12:53:14 IST

QAP (as applicable) before supply. As a minimum, the materials to be supplied by CONTRACTOR may include but shall not be limited to the following

1. Insulating Joints
2. 3D Bends (90°, 45°, 22.5° & 12.5°) of sizes as per tender requirement.
3. All materials like Assorted pipes, all type of Valves (below 4"), all type of Flanges (WNRF, BLRF etc) elbows, tees, reducers, weldolets, sockets, nipples, spectacle blinds, end caps, Gasket and stud & bolt etc. as per tender requirement; spacer & blinds required for permanent installation in the system. Each item shall be inclusive of commissioning spares. List of such spares shall be made part of the offer and the quoted unit/total price shall be inclusive of the spares.
4. Supply of HDPE Telecom Duct & OFC cable (If Applicable)
5. All equipment's & consumables such as welding electrodes, oxygen, acetylene, inert gases, all types of welding electrodes, filler wires, solder wires, brazing rods, flux etc. for welding/ cutting and soldering purposes.
6. All equipment's, materials, components etc. shall be new and specifically purchased for this job. All material to be supplied by the Contractor shall be purchased from the approved vendors of the Company, duly inspected by Third party inspection agencies as per vendor list attached in tender documents. The list of approved vendors is enclosed along with bid document.
7. The procurement and supply, in sequence and at appropriate time, of all materials and consumables required for completion of the Work as defined in this bid document except the Company free issue material, shall be entirely the Contractor's responsibility and price quoted for the execution of the Work shall be inclusive of supply of all these materials.
8. All materials for all types of pipeline markers including cement, sand, reinforcements, structural steel etc. and paint conforming to normal corrosive environment as per specification enclosed with the bid documents.
9. Casing insulators and end seals and materials for casing vents and drains as per drawings.
10. All materials required for continuous concrete coating/ gravel filled geo- textile bags/ saddle weight for providing negative buoyancy to the pipeline wherever required. Contractor shall take prior approval of COMPANY and furnish all details including design calculations in case of use of purpose built geo-textile bags. For river crossings, only continuous concrete coating shall be provided for negative buoyancy.
11. Supply of warning mats as per the technical specification/ EN: 12613 standard (latest edition).

© Copy Right VCS Quality Services Pvt. Ltd. All rights reserved

Digitally signed by RACHNA SHUKLA
Date: 2025.03.13 12:53:14 IST

- The material of warning mat shall be of virgin quality polyethylene (PE) / polypropylene (PP) as per EN: 12613 (latest edition).
- It shall have UV-resistant, non- biodegradable, non-hazardous and non-toxic properties. If warning mat is made from PE material, then, the same shall have anti-rodent properties in addition to above properties.
- Warning mat shall have golden yellow color and printed text shall be in red color and of non-deletable type with high abrasion resistance.
- All test shall be conducted and accepted as per requirement of EN: 12613 (latest edition) unless otherwise mentioned in approved QAP.
- Handling including loading and unloading, packaging, transportation, laying shall be carried out as per manufacturers / supplier's guidelines so that material at all stages up to laying shall be in safe and sound condition.
- Printer matter and their layout shall be approved by PMC/owner before supply.
- Print matter shall be printed in English and Local language alternatively at every 1 m distance. Manufacturer's name, year of manufacturing and batch/lot number shall appear at every running meter of warning mat strip
- In case warning mat is supplied in more than 500 mm width, a sample of width 500 mm from the same lot/batch of material shall be tested as per requirement of EN: 12613. The sample drawn should have same production parameters (except width) as of higher width section.
- Contractor has to submit the QAP of warning mat for approval before commencement of production. Inspection of material will be done at vendor's works by owner/PMC representatives. Any test failed during inspection for the referred lot/batch, the total lot/batch will be rejected. Along with the dispatch clearance photo of the production sample should be submitted for verification.
- Print matter text/ font size will be of letter height 15 mm and thickness of letter line 2 mm. However, vendor to ensure that print matter text size shall be legible when viewed from the range of minimum 5 m distance without magnification.
- If center width of the mat is not sufficient to accommodate the requirement mentioned above, in that case the vendor may put separate PE Centre band/strip to accommodate the below mentioned requirements.
- PE center band/strip shall be golden yellow color and made from virgin quality, high density polyethylene, center band/strip thickness shall be of minimum 0.1 mm thick and shall have UV-resistant, non-biodegradable, non-hazardous, non-toxic and anti-rodent properties.

© Copy Right VCS Quality Services Pvt. Ltd. All rights reserved

Digitally signed by RACHNA SHUKLA
Date: 2025.03.13 12:53:14 IST

- PE center band /strip width shall be 100 mm for warning mat width upto 550mm and 150 mm width of PE center bend shall be kept for warning mat width more than 550mm
- PE center band/strip shall be pasted on center of the warning mat in such a manner, so that after paste inherent material properties of warning mat shall not be compromised. Further peel strength of the used adhesive material shall be sufficient enough so that PE center band/strip shall not peel off during handling, transportation, storage, laying in trench and in wet environment/condition either at above ground or underground condition. Manufacturer/Supplier shall give declaration/ compliance statement regarding the used adhesive for paste purpose of PE centers band/strip.
- The warning mat shall be supplied in single part of 600 mm width for 12" Pipeline.

12. Supply of all materials for installation of windsock and safety signboard at different stations.

13. All materials and consumables required for external corrosion coating and concrete coating (where required) of field weld joints.

14. All materials required for field joint coating, corrosion coating of LR bends, pup pieces of sectionalizing valves and repair of damaged corrosion coating of line pipe. Contractor shall confirm that proposed field joint coating material is suitable for type of terrain encountered along pipeline route. Contractor shall take prior approval from COMPANY for field joint coating material to be used. The cut back length shall be 150 mm + 20 (-0) mm.

15. All material, equipment & consumables for HDD works including approved sleeve.

16. All materials required for sand/ soft soil padding around pipeline and optical Fiber cable, select backfill of approved quality, slope breakers, bank stabilization of water crossings etc.

17. For rocky areas, rock shield shall be provided in addition to sand/ soft soil padding. Rock shield shall be of high density extruded polyethylene mat with following properties:

Thickness	ASTM D-1777	6 mm (minimum)
Compressive Strength	ASTM D-1621	250 PSI
Impact Resistance	ASTM G-14	100 in-lb

Contractor shall obtain prior approval from Engineer-in-charge for rock shield material & its application procedure.

18. All materials including consumables, nitrogen etc. required for hook-up with existing facilities and equipment's.

Format: C251151-00-FMT-001_00 © Copy Right VCS Quality Services Pvt. Ltd. All rights reserved
Digitally signed by RACHNA SHUKLA
Date: 2025.03.13 12:53:14 IST

19. Mobilizing and providing all necessary barricading material, safety signboards, warning lights etc. to safeguard the pipeline against accidents during construction of line in city area.

20. All safety tools, tackles, devices, apparatus, equipment etc. including ladders and scaffolding complete as required.

21. All stud bolts, nuts, jack screws, all type of gaskets (metallic spiral wound gaskets) in required quantities to be used for permanent installation into the system for all sizes and ratings of flanges and flanged valves, equipment etc., including nuts, bolts, gaskets, washers, U bolts, clamps, clips etc. for pipe/ equipment supports. All materials for supports shall be in contractor's account.

22. All types of coating and painting materials including primer and paints suitable for specified corrosive environment for painting above ground piping and 100% solid high build epoxy R95/R150 (minimum 1000 micron Thk.) for underground piping/ valves, fittings ,flanges etc.

23. All pipes, fittings, flanges, blind flanges, gaskets, nuts, bolts, clamps, strainers, equipment/ consumable, metallic blinds, temporary gaskets as required for filling, pressurizing, hydrostatic testing and dewatering, swabbing etc. including test headers for pigging and hydro-testing.

24. All materials such as cohesion less soil/ sand required for installation of pipeline in seismic active zones.

25. All materials required for civil, structural and general civil works including structural steel, cement, reinforcement, concreting, grouting etc. in facilities like dispatch terminal, IP Station, SV stations, injection points and receiving terminal including all types of equipment and material required for excavation/ construction of pits for equipment and instrument installations and steel/ structural steel materials of all types.

26. All materials required for repair/ restoration of pavements, roads, bunds, walls, other structures affected/ damaged by Contractor's construction activities. Materials shall be equivalent/ superior to those used for original construction of the facility.

27. All equipment and consumables required for hydrostatic testing like pumps, pressure and temperature gauges, test water and corrosion inhibitors for test water for hydrostatic testing.

28. Supply of insulators, end seals etc. in case of cased crossings; supply of 6" NB CS conduit. CS conduit of 168 mm dia. for OFC shall also be used in open cut river crossing by strapping with concrete coated line pipe (if required).

29. All materials, consumables and equipment required for welding and for all types of tests and NDT such as radiography, ultrasonic testing, magnetic particle, dye

© Copy Right VCS Quality Services Pvt. Ltd. All rights reserved
Digitally signed by RACHNA SHUKLA
Date: 2025.03.13 12:53:14 IST

penetrate examination etc. including radiography film, X-ray machines, developing equipment and consumables, Ultrasonic equipment's etc.

30. All safety tools, tackles, devices, apparatus, equipment etc. including ladders and scaffolding complete as required.

31. Steel materials such as structural steels, reinforcement steels and steel for all types of supports, foundations, ladders, platforms, etc.

32. All steel materials such as structural steel, reinforcement steel, shims, wedges, packing plates (machined wherever required), pipes, nuts & bolts, washers, U-bolts, anchor bolts, clamps, clips, pipe saddles/ shoes etc. as required for the fabrication of structural supports and supports basements/ foundations, platforms etc. Pipes supplied by COMPANY shall not be used for fabrication of supports and support saddles etc.

33. All materials for corrosion protection of buried piping, pipe fittings, valves, casing pipes, etc.

34. All materials and equipment's related to blasting of rock/ controlled blasting for excavating trench, grading of ROU, pipeline & pipe laying/ installation and other works.

35. All materials for surface type temperature element.

36. Mobilizing Pipe/ cable locator for locating existing pipelines/ cables.

37. All types of corrosion measuring instruments e.g. Corrosion coupons, corrosion probes etc. wherever required as per specification.

38. Sand ridges (sand, polyethylene sheets etc.) and other materials for stacking of surplus pipes at Company's designated storage yard.

39. Corrosion inhibitor shall contain the properties of oxygen scavengers and bactericides. The water test results will determine the recommended dosage in PPM.

40. Required quantities of nitrogen for idle time preservation and pre-commissioning of Pipeline and associated facilities, if required.

41. All pigs for cleaning, gauging, filling, dewatering, swabbing, drying, pre-commissioning and commissioning of the pipeline.

42. All materials i.e. fittings, flanges, valves, blind flange etc. required for isolation and nitrogen purging for pipe section, manpower, equipment, pigs, consumables, nitrogen required for carrying out commissioning of pipeline along with necessary piping and instrumentation connection for monitoring flow rate, pressure, temperature etc. providing temporary facilities for venting/ flaring along with necessary piping, valves and instrumentation etc. shall be in

© Copy Right VCS Quality Services Pvt. Ltd. All rights reserved

Digitally signed by RACHNA SHUKLA
Date: 2025.03.13 12:53:14 IST

contractor's scope.

43. All materials, manpower, spares, tools & tackles and consumables for carrying out pre-commissioning activities and during commissioning (including bi-directional and foam pigs, compressor, nitrogen required for achieving the specified criteria for pipeline intertization/ purging prior to declaring pipeline fit for commissioning) necessary piping and instrumentation connection for measuring flow rate, pressure, temperature etc., temporary facilities for blowdown/ venting/ flaring along with necessary piping, valves & instrumentation as well as consumables and manpower required during pre-commissioning and commissioning.

44. All materials and consumables required for external corrosion coating and concrete coating (where required) of field weld joints shall be included in the cost of laying of pipeline network and shall be in scope of contractor.

45. Dirax or equivalent field joint coating material for HDD works.

46. All materials required for sand/soft soil padding around pipeline and optical fiber cable, select backfill of approved quality, slope breakers, bank stabilization of water crossings wherever required.

47. All materials including consumables required for hook-up with adjoining pipeline section or wherever required.

48. Supply of cohesion less soil, if required, like sand, silty sand, etc. for complete backfilling of pipeline trench for a specified distance in areas prone to Seismic activity.

49. All primer and paints for painting above ground piping. All painting shall be as per specification enclosed with the bid package. Paint shall be suitable for low temperature application as per company specification enclosed with the bid document wherever specified.

50. Material for the maintenance of sand ridges and other materials for pipe stacking at Contractor's warehouse/storage yards'/work site/ROU.

51. All materials for skin measurement instrument.

52. All temporary materials and consumables required for filling and pressurizing in connection with hydrostatic testing, dewatering, swabbing and pre-commissioning activities, etc. Including pipes, flanges, fittings, gaskets, bolts, nuts, etc. required for fabrication of temporary pig traps and /or test headers.

53. All materials required for repair/restoration of pavements, roads, canals, temporary water pipes, walls, other structures affected/damaged by Contractor's construction activities. Materials shall be equivalent/superior to those used for original construction of the facility. Any other area damaged outside the construction area by the contractor due to movement of machinery or any other

© Copy Right VCS Quality Services Pvt. Ltd. All rights reserved

Digitally signed by RACHNA SHUKLA
Date: 2025.03.13 12:53:14 IST

reason will be repaired by the Contractor without any extra cost to the owner.

54. All pigs for cleaning, gauging, de-watering, swabbing, filling, pre-commissioning and commissioning of the pipeline.

55. Pumps and water to be used for hydrostatic testing/ flushing shall be supplied by the contractor. All materials & consumables required for hydrotesting shall be supplied by the contractor.

56. All casing pipes, casing insulators and end seals including materials for vent and drain and strapping CS conduit with pipe and carbon steel pipes in required quantities.

57. All consumables and equipment's required for all types of tests and NDT such as radiography, ultrasonic testing, magnetic particle, dye penetrant examination etc. including radiography film etc.

58. All safety tools and tackles, devices, apparatus, equipment, personal safety gazettes to be used as personal protective equipment (such as helmets, safety belts, safety shoes, etc.) including ladders and scaffolding etc. complete as recommended by Engineer-in-Charge as per relevant safety standards

59. All structural steel material for all types of supports.

60. All materials and equipment for excavating trench or grading the Right-Of-Use pipeline and pipe laying/installation and other works.

61. All steel materials such as structural steels, reinforcement steels and steel for all types of supports, foundations, ladders, platforms etc. including Bolts, nuts, washers, U bolts, clamps, clips, gaskets, Shims, wedges and packing plates (Machined wherever required) and materials required for fabrication of low friction sliding bearing supports.

62. All fencing, gate and steel materials such as structural steels, reinforcement steels and steel for all types of supports, foundations, ladders, platforms, etc

63. All other materials not specified above but required for successful completion of the entire work whether temporary or permanent in nature.

64. All materials supplied by the Contractor shall be strictly in accordance with the requirements of relevant Company material specifications enclosed with the tender document.

65. Corrosion resistant straps required for strapping CS/ HDPE conduit with mainline at crossings of water bodies and other crossings.

66. All spares for pre-commissioning and commissioning as required for all items supplied by Contractor for the entire pipeline system.

67. All materials, equipment and personnel required for videography and all

© Copy Right VCS Quality Services Pvt. Ltd. All rights reserved
Digitally signed by RACHNA SHUKLA
Date: 2025.03.13 12:53:14 IST

associated works.

The item rates quoted for the execution of the work shall be inclusive of supply of all materials mentioned above unless specifically covered otherwise under schedule of rates. The quantities indicated in schedule of rates under Contractor's scope of supply are approximate. Contractor shall carryout MTO of all materials required based on IFC general arrangement drawings, P&IDs and firm up the actual requirement of materials. All escalation/ extra materials procured by Contractor for contingencies shall be Contractor's property and no payments shall be made for such materials. Payment shall be made for actual materials installed by the Contractor as a part of permanent installation.

In case, any item is covered in scope of work but is not present in Schedule of Rates (SOR), it will be assumed that bidder has included cost implication of those items in their total price.

7.3. STORAGE OF MATERIALS

7.3.1. All materials shall be preserved against deterioration and corrosion due to poor or improper storage while under the custody of the Contractor.

7.3.2. All materials shall be duly protected by the CONTRACTOR at his own cost with the appropriate preservatives like primer, lacquer coating, grease etc. and shall be covered with suitable material to prevent them from direct exposure to sun, rain, wind and dust.

7.3.3. Whenever applicable, pipes shall be stacked according to the identification marks and stacks shall be arranged on sleepers/ sand pads at least 300 mm above ground.

7.3.4. The CONTRACTOR shall check that valves, fittings, specials etc. are not subjected to corrosion from hydrostatic test water remaining in the packing. Any such condition when detected should be brought to the notice of Engineer-in-Charge and remedial measures taken as directed.

7.3.5. All machined surfaces shall be properly greased and should be maintained and protected from damages.

7.3.6. Openings of equipment, machinery, valves etc. shall be kept blocked/ covered with blinds to prevent entry of foreign matter.

7.3.7. As far as possible materials shall be transported to the site of erection only just prior to the actual erection and shall not be left lying around indefinitely on ground but kept on packing/ sleepers etc. to maintain the minimum distance from the ground as specified and/ or as per directions of Engineer-in-Charge.

7.3.8. Client reserves right to unload line pipe directly in the store on contractor. Contractor shall maintain store yard accordingly and shall submit their price considering factor of the same. Client shall not pay any extra cost to Contractor for loading & unloading the contractor's store or elsewhere for handling of Line pipes

8. SCOPE OF WORK AND SCOPE OF SUPPLY FOR OTHER DISCIPLINES

Detailed scope of work and scope of supply covered in this document given above is pertaining to pipeline laying and associated pipeline terminal/ station piping works only. Detailed scope of work related to civil, architectural, structural, Cathodic protection,

Digitally signed by RACHNA SHUKLA
Format: C251151-00-FMT-001_00 © Copy Right VCS Quality Services Pvt. Ltd. All rights reserved
Date: 2025.03.13 12:53:14 IST

corrosion monitoring system, electrical, instrumentation, telecom, firefighting and water supply works are covered in separate documents in detail and the same are enclosed elsewhere with the Bid document. All these documents shall be read in conjunction with this document and shall form an integral part of the overall Scope of work of the Contractor(s).

9. OTHER CONDITIONS OF BID

9.1. Basis of Work

9.1.1. All piping/ pipeline works shall be carried out as per following:

a) Piping and Instrumentation Diagram (P & IDs) and line schedule.

b) Approved for construction Piping General Arrangement Drawings (GADs).

c) Approved for construction Alignment sheets/ crossing drawings.

d) Piping Material Specifications.

e) Specifications

f) Piping support standards/ drawings and support index.

g) Any other drawings/ sketches prepared by Company and/ or by the Contractor and approved by the Company

9.2. Topographic Survey

- The alignment sheets including plan and ground profile details, details of various crossings shall be provided at the time of execution.
- It shall be the Contractor's responsibility to verify the pipeline routes. Wherein Contractor's opinion the survey and investigation data is not found to be sufficient in detail, it shall be the responsibility of the Contractor to collect/ arrange and provide such topographic surveys.
- Further, successful contractor(s) after award of work shall immediately carry out topographic survey and geotechnical investigation of all crossings other than those provided by the company in the pipeline route and prepare crossing drawing for each crossing. The drawing shall be submitted for Company's approval. IFC alignment sheet shall be issued based on the input of above crossing drawings.
- Contractor shall also perform any additional topographic surveys and geotechnical investigations that may be required for local detours or at crossings or at any other location during execution of the project without any extra cost to the COMPANY. Pipeline alignment shall be marked on village maps by CONTRACTOR wherever detouring is beyond existing ROU. CONTRACTOR shall be deemed to have considered such eventualities while formulating his bid.
- It shall be the responsibility of the Contractor to re-establish the route from the survey data made available by Company. Contractor shall maintain and preserve survey monuments (staked on ground) such as bench marks and intersection points, till construction is completed.

© Copy Right VCS Quality Services Pvt. Ltd. All rights reserved
Digitally signed by RACHNA SHUKLA
Date: 2025.03.13 12:53:14 IST

9.3. Alignment Sheets and Station Drawings

- Typical station drawings are also included in the Bid package. These drawings are marked as "Tender Purpose Only".
- The IFC (Issued for Construction) drawings issued during project execution stage may vary from the drawings included in the Bid Package. CONTRACTOR shall carry out all works in accordance with these IFC drawings at no extra cost to the COMPANY.

9.4. Description of pipeline Route

9.4.1 Route Description

- Bidder shall visit the entire route before bidding.

9.4.2 Most of the areas the Pipeline network shall be laid along the road/ industrial area and residential area. The ROU shall be restricted in all along the pipeline network Route.

9.5. Soil Investigation and Soil Resistivity survey

Survey report for soil investigation and soil resistivity survey shall be provided prior to execution.

It shall be Contractor's responsibility to verify the data and satisfy himself with regard to accuracy and utility of data. CONTRACTOR shall carry out any additional soil data/ investigation required for installation. CONTRACTOR shall not be entitled for any compensation in terms of time or cost in case of any variation in actual site conditions from the data furnished in the bid package. **It shall be Contractor's responsibility to familiarize himself with sub-soil conditions along the pipeline route and workout the lengths of pipeline to be laid in different subsoil conditions including the quantum of rock excavation that would be necessary. Unit rates quoted shall also be inclusive of all rock excavation. No extra compensation shall be payable to CONTRACTOR for any rock excavation whatsoever.**

9.6. Pipeline ROU

Contractor shall carry out construction work within the width of pipeline available ROU as made available to them with no time and cost implication to the Company. The Contractor shall arrange any additional ROU requirement for construction purposes. It shall be Contractor's responsibility to make arrangement for any additional land required for fabrication, construction, storage and all other work areas. In certain restricted areas such as private holdings, congested and plantation areas etc. ROU is restricted. In forest areas only 10 m ROU will be made available to the contractor. Contractor shall propose suitable execution methodology and time schedule for construction/ execution of work at areas of restricted ROU and deploy adequate equipment& manpower etc. as required. Contractor shall also arrange additional land during installation of Pipeline by HDD. Damages, if any, to existing pipeline and facilities shall be Contractor's account. Wherever the detouring is carried out beyond

Format: C251151-00-FMT-001_00 © Copy Right VCS Quality Services Pvt. Ltd. All rights reserved
Digitally signed by RACHNA SHUKLA Date: 2025.03.13 12:53:14 IST

ROU during pipeline installation, the detoured pipeline alignment shall be marked on village maps by the pipeline installation Contractor.

9.7. Pipeline Passing Through City Area and Along NH/ SH

In case the pipeline passes through city areas, it will be laid generally in the carriage way. Wherever it is not possible to lay the pipe line on the carriage way for any reason whatsoever, the pipeline will be laid on service road / footpath. It will be the responsibility of the Contractor to identify all the underground utilities after surveying the area along the gas pipeline route and lay the pipeline with clear distance (as specified in Specification) from other existing utilities like cable, water pipeline etc. In case of hydrocarbon pipeline the clear distance shall be as specified in Specification.

9.8. RESTRICTION OF ROU

- In congested urban/industrial areas where the exact location of the existing services (aboveground as well underground) is not known, the contractor shall contact the concerned authorities to get the permission to cross the existing utility including approval of the final alignment of the pipeline before commencement of work. Contractor shall obtain the Digging Permit from the respective authority. In addition to this acquisition of NOC from the respective utilities' companies will be also in the scope of the contractor.

- In most of the areas, the Pipeline shall be laid along the road and residential/ Industrial/ city area. The ROU shall be restricted in the entire pipeline Route. Contractor shall consider all these eventualities while bidding. It shall be Contractor's responsibility to make arrangement for any additional land required for fabrication, construction, storage and all other work areas. Contractor shall carry out construction work with in the width as available to him. Damage to any obstruction, temporary/permanent structure, boundary walls etc. shall be repaired and restored and shall be to Contractor's account.

- The Contractor must ensure that during laying of the pipeline minimum damage occurs to the land. The land has to be restored to original condition. All construction activities shall be in accordance with the local Government regulations.

- During pipeline construction, measures shall be adopted in order to minimize the impact of pipeline construction activities on the environment.

- In case contractor wishes to propose any detour from the acquired alignment due to constructability problems or otherwise, he may be permitted to do so only after explicit approval from the Company. All immediate measures for taking the land and compensations to land owner(s) shall be to Contractor's account. Company shall proceed with regular notifications etc. in due course. All statutory fees shall be paid/ reimbursed by Company. However, such activity shall not affect the construction schedule and overall completion period.

- In many areas due to pipeline being laid in ROW of NH/ SH areas and due to several underground obstacles encountered during construction, mechanical trenching may not be possible. In such cases Contractor shall perform the work by

© Copy Right VCS Quality Services Pvt. Ltd. All rights reserved
Digitally signed by RACHNA SHUKLA
Date: 2025.03.13 12:53:14 IST

manual means without any Cost as well as time implications.

- The contractor shall finalize the alignment of pipeline by making the trial pits at regular intervals in order to ensure the location of existing underground utilities.
- In urban/ Industrial areas where there are numerous underground utilities, the cover of 1.2m /1.5 m may not be sufficient; Contractor will not raise any compensation for any such necessary deepening. Due to deepening of trench, it may be required that shoring of trench may be required to avoid collapse of the same along the road. The same shall be done by the contractor without any cost implications.
- Due to restriction by statutory authorities, the Contractor may not be allowed to work during monsoon season. Thus for such areas the contractor shall plan his work accordingly and submit his schedule to relevant authorities without any time as well as Cost implication.
- In city areas where, due to restrictions by the statutory authorities, the movement of heavy machinery is not allowed, the laying /Construction activities shall have to be carried out manually. Only tyre mounted equipment such as Hydra/ JCB etc. will be permitted with consent of the concerned authorities.
- Contractor may plan to work in the Night shift to avoid traffic and in residential/industrial/city areas to keep minimum disturbance during day time. But Contractor has to plan and take approval from Engineer In charge/ Client and Concerned Authorities before start of construction. Contractor to arrange all lighting and safety precaution for the same.
- The authorities may impose stringent conditions for laying the pipeline in certain areas like limited length of working section, night work shift only etc. Thus, the contractor must submit his working methodology to relevant authorities in order to obtain the necessary permission for laying the pipeline prior to commencement of work.
- Due to non-mobilization of the heavy machinery and due to underground utilities, the welding of long pipe string above ground and lowering may not be possible, therefore welding may need to be carried out in the trench by making bell holes for individual pipe or small sections of pipe.
- To comply with the agreed work schedule, the contractor may work in shift or extended hours.
- The Contractor shall be deemed to have taken into consideration all variations as mentioned above at the time of formulating his bid and no extra compensation either by way of time or cost shall be admissible.

9.9. PARTICULAR INSTRUCTIONS

- In Principle all statutory permissions from all concerned shall be obtained by Client. However, all activities related to liaison, co-ordination etc. with all authorities needed to achieve the work as per schedule will be under Contractor's scope including taking work permit/ Digging Permit before commencement of work.

© Copy Right VCS Quality Services Pvt. Ltd. All rights reserved
Digitally signed by RACHNA SHUKLA
Date: 2025.03.13 12:53:14 IST

Contractor shall also inform and seek necessary permission from the local traffic police before commencement of trenching work.

- For access route to the working strip, the Contractor will be responsible to negotiate with the relevant owner, tenant or authorities. Any deemed compensation will be borne by the Contractor.
- The contractor shall be responsible for overall entire quality control activities for the present project.
- Contractor proponent shall have to take prior approval of concerned Government agencies while carrying out blasting wherever required.
- Contractor proponent shall have to take preserve top soil dug and shall be restored to original condition on completion of the work.
- Owner shall obtain permission from the Forest department. However, required assistance to get the permission from the respective authorities, necessary liaison, co-ordination etc., with the authorities needed to achieve the work as per schedule including taking work is in the Contractor's scope.
- While carrying out the laying activities any damage to other utilities to be repaired by the contractor to the full satisfaction of the utility agency. Any claim arises out of damage of other utilities shall be borne by the contractor.
- Contractor proponent shall construct the pipeline and other infrastructure and adopt safety measures as per the standards & specification laid down by the concerned agencies from time to time.
- Contractor proponent is required to comply with the manufacturing, Storage and import of Hazardous Chemicals Rules -1989 framed under the Environment (protection) Act 1986.
- On completion of all temporary work structures, surplus materials and wastes shall be suitably disposed of.
- Similarly, any additional conditions issued by statutory authorities will also have to be complied with by the contractor without any cost implications.

9.10. PREPARATION OF CONSTRUCTION SITE

The overall duration of the works at every point of the pipeline route, from the opening of the working area to lowering of pipeline and trench backfilling shall not exceed the permit condition of relevant authority.

9.11. WORKING STRIP

No ROU exist for the city portion line along the authority land. Working strip may be available along the road side for the construction site. Contractor should deploy suitable equipment and adopt his working methodology accordingly.

9.12. REDUCING THE WORKING STRIP

© Copy Right VCS Quality Services Pvt. Ltd. All rights reserved
Digitally signed by RACHNA SHUKLA
Date: 2025.03.13 12:53:14 IST

Contactor shall not be compensated for any reduction in the width of working strip.

9.13. REVERSE OF THE WORKING STRIP

No fencing of any kind along the pipe route is essential to be provided. However, it remains the responsibility of the Contractor to barricade the area of open trenches so that no untoward accident takes place.

9.14. EXCAVATIONS (UNDERGROUND OBSTACLES)

In congested area or if deemed necessary by Owner's Engineer or concerned authorities where numerous utilities may be encountered the contractor should carry out the excavation manually without entitlement of any compensation. Proposed pipeline shall be beneath the main underground utilities and minimum 500 mm gap also to be maintained in-between proposed pipeline and existing underground utility.

9.15. REINFORCED CONCRETE SLABS AS MECHANICAL PROTECTION FOR THE PIPE

Crossing of utilities will be done by invariably going below the utilities maintaining a clear gap of minimum 20 cm except hydrocarbon pipelines. From hydrocarbon pipelines, clear gap of minimum 50 cm shall be maintained. If due to site constraint it is not possible to lay the pipeline as per the above cover requirement, Contractor shall initiate the proposal for approval of Deviation and obtain written permission from EIC.

9.16. MARKERS

Pipeline Warning Markers shall be installed at each and every Kilometer. Apart from this, additional warning markers shall also be installed at each side of highways (NH/SH), major district roads (MDR), all metaled roads, railway crossings, water body crossings, any other major crossings and at entrance to stations.

For urban Agglomeration (UAs) / Towns having a population of 1 lakh or more, the warning marker shall be installed at least at every 50 meters and if required additional markers shall be installed where there is possibility of damage or interference.

Pipeline Warning Sign shall in general be installed at

- National and State Highway Crossings (2 Nos.)
- Other Road Crossings (1 No.)
- Railway Crossings (2 Nos.)
- Minor Water Crossings (less than 15m width) (1 No.)
- Minor Water Crossings (above 15m width) (2 Nos.)
- Major Water Crossings (2 Nos.)

© Copy Right VCS Quality Services Pvt. Ltd. All rights reserved
Digitally signed by RACHNA SHUKLA
Date: 2025.03.13 12:53:14 IST

- Valve Station (1 No.)
- And at any other location as shown in the approved drawings and as directed by the COMPANY.
- Pipeline Warning Sign shall identify the existence of the pipeline

Aerial markers shall in general be installed along the pipeline at every 5 kilometer's interval and at places specified by COMPANY. The aerial kilometer marker having the warning details can also be treated as warning marker.

Kilometer markers shall in general be installed at every one (1) kilometer interval along the pipeline route and in place of every fifth kilometer marker, aerial marker shall be provided. The Aerial/ Kilometer Markers having the warning details can also be treated as Warning Marker.

Right-of-Way/ boundary markers shall be installed at every 250 meters interval along the entire pipeline route. These shall be installed on either side of the pipeline alignment to define the ROW boundary limits. These shall also be installed at pipeline turning points to maintain the continuity of the ROW limits. In urban agglomerates (UAs)/ towns having a population of 1 lakh or more, pipeline route marker shall be installed at least at every 25 meters.

9.17. DIRECTIONAL MARKERS

Direction markers shall be installed to identify the significant turning points of the pipeline during aerial traverse. One direction marker shall be installed at each turning point. In addition, direction markers shall also be installed along the pipeline alignment at 150 m upstream and downstream of turning points.

9.18. EXCAVATED MATERIALS

- The excavated material shall be placed in such a way as to avoid any inconvenience to property owners, or interference to the circulation of pedestrians or vehicles as well as to the operation of near-by installations. The excavated material shall be piled up in such a way that they enable the watering of the trees. No excavated material shall be piled up in the road crossings. It may be insisted upon by the authority to remove all the excavated materials immediately after trenching.
- To prevent the excavated stone and earth from falling into the trench, a strip
- 20cm shall be left clear between the edge of the trench and the bottom of the pile of excavated earth. This width may be increased, according to the nature of the ground and the atmospheric conditions.
- Wherever necessary, the contractor is required to remove the excavated material from the site and to be kept at a dump yard until the trench is to be back filled and to be brought back to the site for backfilling.

© Copy Right VCS Quality Services Pvt. Ltd. All rights reserved
Digitally signed by RACHNA SHUKLA
Date: 2025.03.13 12:53:14 IST

- When the excavated material is judged by the Engineer to be unsuitable for re-use, the Contractor shall remove it from the site as the digging of the trench proceeds and shall supply in its place suitable material approved by the Engineer-In-Charge.

- Contractor is required to arrange the steel plates (preferably 1.5 meters wide x 20mm Thk.) to place on the excavated trench for smooth movement of traffic.

9.19. Signalling, Fencing & Lighting

- Each site shall be provided with an identification board mentioning the reason for the work and the names of the Company, the Contractor and the Consulting Engineer, as stipulated in the special specifications.

- At both ends of the trench, the Contractor shall install 2 traffic and warning signs, and Display board one immediately close to the trench and the other ahead, as required by the Engineer-In-Charge.

- The Contractor shall install lights and warning lights around all working areas, in accordance with the special specifications. The voltage shall conform to the safety regulations in force.

- The Contractor shall install barricading and lighting of all trial-holes, trench sections and other excavations.

- The Contractor shall provide watchmen wherever deemed necessary for the safety of the public and of the workers, in particular as regards working sites, on site material stockage, temporary dumping yards, etc.

9.20. Barricading

- The contractor shall provide the barricades of size 2m wide X 1.5m high of wooden/plastic/steel with necessary supports along the open trenches to protect/caution the public about the digging work without any cost to owner. The barricades shall be painted as per the requirement of authority with the owner's/Consultants/Contractor's details, job being carried out, cautions, inconvenience captions, etc. also needs to be provided.

- Contractor shall Excavated trench & pits in residential area, area near heavy traffic and other areas for kept for movement of animals, shall not be left open without barricading. Contractor shall consider all these eventualities while bidding.

9.21. Site Visit

- Bidders are advised to make site visits for complete pipeline network route to establish the route, missing survey stones and familiarize with the working conditions familiarize themselves with all the salient features of subsoil, terrain and available infrastructure along the pipeline route so as to plan for deployment of man and machinery. Contractor shall be deemed to have considered all constraints and eventualities on account of site conditions along pipeline route while formulating his bid. Contractor shall not be eligible for any compensation in terms of cost and/ or time, on account of site conditions along pipeline route varying to any extent from whatever described in the Bid Package and the

© Copy Right VCS Quality Services Pvt. Ltd. All rights reserved

Digitally signed by RACHNA SHUKLA
Date: 2025.03.13 12:53:14 IST

survey/drawings/data furnished along with the Package.

9.22. Line Pipes & Coatings

9.22.1. Taking Over of Pipes

COMPANY shall supply bare, externally corrosion coated with 3-layer polyethylene coating and internally epoxy coated line pipes. Contractor shall receive and take over the pipes progressively as per construction requirements at designated place of issue in presence of Company's representative. At the time of taking-over, Contractor shall perform inspection of pipes and pipe coating for all defects in the presence of Company's Representative. COMPANY shall be liable for repair defects and damage to pipe coating noticed at the time of taking over. However, installation Contractor shall repair all defects to pipe and pipe coating occurring after taking over including those during transportation and handling. Rebuffing for dents (in bevels) less than 1 mm in depth shall be carried out by Contractor ahead of welding in the field at no extra cost to COMPANY. Contractor shall take-over the entire quantity of bare and coated line pipe from storage yard after completion of installation works.

Return of surplus line pipe material to Company's designated storage yard is in installation Contractor's scope including loading, transportation, unloading, handling, stacking of pipes at storage yard and getting the pipes inspected to Company's representative at storage yard.

9.22.2. Repair of Coatings

CONTRACTOR using suitable material compatible with parent coating system shall carry out any repairs to 3-layer polyethylene coating. The coating repair material and procedure for application shall be submitted to COMPANY for approval prior to start of construction.

Repair of PE coated pipes in field shall be carried out as follows in accordance with bid specification.

i. Damages caused to coating by handling such as scratches, cuts, dents, gouges, not picked up during holiday test, having a total reduced thickness on damaged portion not less than 2.0 mm and an area not exceeding 20 cm^2 shall be rebuild by heat shrink patch only and without exposing to bare metal.

ii. Defects of size exceeding above mentioned area or holidays of width less than 300 mm shall be repaired with heat shrink repair patch by exposing the bare metal surface.

iii. Defects exceeding the above and in number not exceeding 2 per pipe and linear length not exceeding 500mm shall be repaired using heat shrinkable.

9.23. Statutory Permissions

The COMPANY shall obtain a general permission from the various authorities having jurisdiction over the area as necessary for construction of the pipeline. However, for some of the permissions, if not available, Contractor shall do the follow up with the

Format: C251151-00-FMT-001_00 © Copy Right VCS Quality Services Pvt. Ltd. All rights reserved
Digitally signed by RACHNA SHUKLA
Date: 2025.03.13 12:53:14 IST

concerned authorities to get the permissions to execute the job in time. However, all statutory payments required for such permissions shall be reimbursed by Company at actuals. CONTRACTOR shall obtain the necessary permits like work permit/ excavation permit/ trench opening permit etc. for all works from the authorities having jurisdiction before the actual execution of various phases of the works and all stipulations/ conditions/ recommendations of the said authorities shall be strictly complied with at no extra cost to COMPANY. CONTRACTOR shall also obtain all necessary permissions from the concerned authorities for installation of pipeline at railways, roads, water crossings and at places where blasting is required. COMPANY may, however, assist CONTRACTOR in obtaining such permissions, wherever required, by issuing recommendation letters etc. In case of damage to other utilities/ infrastructure, Contractor shall be responsible and the required compensation as per the directions of concerned authorities/ COMPANY shall be paid by the Contractor. After completion of work, Contractor shall obtain a certificate from the concerned authorities that the job has been completed as per their requirement and the area/ land has been restored to their satisfaction.

9.24. Controlled Blasting's

In case blasting is required for making of trench for laying pipeline, it shall be responsibility of the contractor to ensure safety of pipeline while carrying out blasting operations. The controlled blasting procedure shall be subject to approval of Company.

9.25. Environmental Restrictions

- The following measures shall be adopted during pipeline construction in order to minimize the impact of pipeline construction activities on the environment.
- While working in plantation areas, Contractor shall take due care to minimize the damage of trees. The number of trees felled shall be restricted to minimum based on working requirement for pipeline installation. In the paddy field area, Contractor shall exercise maximum care not to damage the crop outside the ROU. The compensation of damage of crop outside ROU, if any, shall be to Contractor's account. Damage to any obstruction, temporary/ permanent structure, boundary walls etc. within ROU shall be repaired, restored and shall be to Contractor's account.
- During ROU clearance, the vegetation shall be cut off at ground level leaving the roots intact to the extent possible. Only stumps and roots directly over the trench shall be removed for pipeline installation.
- Intake and discharge of water required/ used for line flushing and testing should not cause unacceptable environmental disturbance. During dewatering process, proper drainage arrangement shall be made to discharge the hydro-test water to avoid flooding of the nearby area.
- As far as possible, the contractor shall ensure that river and stream crossings are done during dry season to avoid disturbance of breeding grounds and soil erosion. The riverbed, embankments and dykes shall be restored adequately after

© Copy Right VCS Quality Services Pvt. Ltd. All rights reserved
Digitally signed by RACHNA SHUKLA
Date: 2025.03.13 12:53:14 IST

installation of crossings

- The contractor shall exercise adequate care while working, in order to avoid damage to forests and wildlife.

9.26. Pipeline through Seismic Areas

The requirements specific to safety of pipeline against seismic activity:

- Backfill for pipeline trench at locations where the pipeline crosses the faults should be provided with loosely compacted (unit weight<1.8 t/m³) cohesion less soil for a distance of 1 km on both side of such crossings. The angle of friction of cohesion less soil to be used for backfilling should not be more than 25º. In case the dugout soil of the trench is clayey in nature (undrained shear strength greater than 0.5 T/m²), the local soil shall be replaced by engineered (cohesion less) backfill as mentioned in previous paragraph. Otherwise, the same dugout soil can be used as backfill. The recommended backfill shall be at least 600 mm thick all around the pipeline. Extra digging of trench shall be carried out to provide 600 mm cohesion less soil all around the pipeline.

- If the fault crossing zone, the pipeline is in rocky terrain, the following recommendation is made. When the pipeline is to be laid on a rocky terrain, the stones/ boulder/ rock dugout from the trench should be crushed such that maximum size of stone/ boulders is limited to 20 mm. The crushed stone should be mixed with locally available soil, before using as backfill. Alternatively, 150 mm sand padding shall be provided all around the pipeline before crushed boulders/ stones are placed over the sand padding. In this case the size of boulders can be increased up to 100 mm.

- A minimum gap of 100 m shall be maintained between two successive bends of the underground pipeline where the deflection angle is more than 45º. Rerouting shall be carried out in consultation with Company incase minimum gap could not be maintained.

9.27. Pipeline Burial

The pipeline shall be buried normally at a depth of 1.0 meter except river/ rail/ road/ canal/ water crossings/ paddy fields/PWD roads where cover shall be as given in design basis, Alignment sheet or as per the requirements of statutory/ local authorities whichever is more stringent. Increased wall thickness (as indicated in alignment sheets) and cover shall be provided at critical locations and at crossings.

The pipeline, in general shall be laid underground with minimum cover as provided in design Basis.

9.28. Crossings

For all rails, road, canal, river & other water crossings, Contractor shall liaison with relevant authorities and intimate them well in advance about the schedule and methodology of crossing. It shall be obligatory on the part of the laying Contractor to

© Copy Right VCS Quality Services Pvt. Ltd. All rights reserved

Digitally signed by RACHNA SHUKLA
Date: 2025.03.13 12:53:14 IST

ensure that Authorized Representative of the authority under whose jurisdiction the crossing falls should be made available at site by the Contractor at the time of making crossing. After completion of works and complete restoration of ROW, Contractor shall provide NOC from the relevant official pertaining to complete restoration to their satisfaction and certification in respect of no other damage caused to their property outside the earmarked ROW.

9.29. Railway Crossings

In case of permission by Boring: Pipeline at railway crossings shall be provided with a casing pipe. The casing pipe shall be three nominal pipe sizes larger than carrier (unless advised otherwise by concerned authorities) and shall be installed by boring/ jacking/ HDD/ ramming. Internal of Casing pipe shall be coated with two-component epoxy coating wherever required by statutory authorities. It should be noted that the extent of casing pipe generally specified by Railways is 14.0 m beyond centerline of the outermost tracks on either side or 0.6 meter beyond the ROU/ROW limits of Railways on either side, whichever is more. Carrier pipe shall be electrically insulated from the casing pipe and casing ends shall be sealed using durable, electrically non-conducting materials. The crossing drawing shall be subject to approval of concerned Railway Authorities prior to implementation. The railway crossing shall comply with the requirements of API 1102 and Indian Railways regulations. The crossing angle shall be as close to 90° as possible. Cover of casing pipe for railway crossings shall be minimum 1.7 m wherever railway track is on embankment. Care shall be taken to isolate the pipeline crossing installation from aerial electrical wires and shall be suitably insulated from underground conduits carrying electrical wires. The casing pipe shall be provided with minimum 50 mm diameter vent pipe. Casing vent pipe shall be at least 1.2 m away vertically from aerial electrical wires and shall be suitably insulated from underground conduits carrying electrical wires on railway land. Casing pipe should be so placed and oriented so as to prevent any leakage inside railway boundary except through the vent pipes. The casing pipes shall be installed with even bearing throughout the length

In case of permission by HDD: If railway authority grants permission for crossing of railway by HDD method, pipeline shall be laid at least 7 m below the ground level throughout the railway land width embankment and also at least 7m below formation level in cutting throughout land width.

Further, as per railway Guideline on Pipeline Crossing under Railway track, in case of pipelines carrying gas, Railway operations should be considered equivalent to Location Class 4 for design of carrier pipe thickness. Design factor of 0.4 shall be used for calculating wall thickness of carrier pipes within railway land and up to a distance of risk radius outside the railway boundary (ROU/ROW) on either side.

9.30. Road Crossings

- The method of crossing of roads such as open cut/ trench-less shall be firmed up by CONTRACTOR in consultation with concerned authorities and COMPANY. The

Format: C251151-00-FMT-001_00 © Copy Right VCS Quality Services Pvt. Ltd. All rights reserved
Digitally signed by RACHNA SHUKLA Date: 2025.03.13 12:53:14 IST

CONTRACTOR shall also take due care to identify and take due precautions so as not to disturb or damage the utilities like cables, water lines and other structures.

- After laying the pipeline in a road crossing by open cut method, the CONTRACTOR shall completely restore the road to its original condition.
- While laying the pipeline in road crossings by open cut method the CONTRACTOR should ensure that the traffic is not stopped during the execution of work. This may be done by cutting half of the road at a time so as to enable the traffic to pass on the remaining half of the road. Alternatively, the CONTRACTOR can provide diversion roads to maintain the flow of traffic. For NH crossings, traffic of both sides shall not be disturbed.
- The CONTRACTOR shall provide proper caution boards during daytime and danger lights during night time when the cutting operation of the road is going on.
- For National Highways/ state highways, crossing shall not be too near the existing structure on the NH maintaining a minimum distance of 15 meters or as specified by Highway Authority.
- The National Highway crust shall be built to the same strength as the existing crust on either side of the trench or to thickness and specification stipulated by Highway Authority. Care shall be taken to avoid the formation of a dip at the trench.

9.31. Canal/Drain/Minor water Crossings

- Canal and other water crossings shall be carried out by open cut/ trench-less technology method. CONTRACTOR shall firm the method of crossing in consultation with concerned authorities and COMPANY.
- HDD method shall be adopted for river/water/ canal crossings that are specifically mentioned in this document or decided at site by Engineer-in- charge. These crossings shall be installed and paid separately as per schedule of rates.
- No damage should be caused to any irrigation sources, while laying the pipeline through canal crossings.
- The flood banks of the River/ Canal should be brought to the original condition, if they are damaged by the laying of the pipeline. Stabilization of banks shall be carried out as per requirements of concerned authorities.
- The detailed construction methodology/ plan and time etc. shall have to be finalized by CONTRACTOR in consultation with concerned authorities having jurisdiction over canals/ rivers. COMPANY shall provide assistance by providing introductory letters.

9.32. Existing Pipeline Crossings

The specific requirements of Owner / operator of existing pipeline shall generally be followed. The minimum clearance between the lines shall be 500 mm below existing pipeline unless specified otherwise.

9.33. Pipeline in Forest Area

© Copy Right VCS Quality Services Pvt. Ltd. All rights reserved
Digitally signed by RACHNA SHUKLA
Date: 2025.03.13 12:53:14 IST

- Contractor shall restrict the pipeline laying activities within the ROU acquired. No additional land in forest area shall be used. Contractor shall clear only the minimum width required for laying of pipeline. Number of trees/ plants felled shall be kept a minimum based on construction requirements. ROU width in forest area is 10 m. or less.

- Full care shall be taken to ensure that no damage is caused to the adjoining forest area while carrying out the work. However, in case of any damage, Contractor shall be liable to pay suitable compensation as per requirements of Forest Department.

9.34. Installation of Conduits for Optical Fiber Cable at Crossings (if required)

- At all crossing locations (viz., rail, road, canal and minor water course crossings) the optical Fiber cable shall be installed inside a HDPE Telecom Duct to be installed by the CONTRACTOR.

- At all such crossings where the carrier pipe is installed by open-cut of the facility crossed, HDPE conduit shall be installed along with the pipeline for installation of the Optical Fiber Cable. At river crossings where anti buoyancy measures are provided for the carrier pipe, HDPE conduit shall be placed inside a CS casing pipe and shall be strapped to the mainline at 5m interval using high strength PE straps. Net specific gravity of pipe in empty condition should not be less than 1.2. In any case, OFC conduit shall not be installed in casing of carrier pipe.

9.35. Cathodic Protection Works

- Temporary Cathodic Protection (TCP) of respective pipeline sections/parts shall be in the scope of the CONTRACTOR. However Permanent Cathodic protection works (PCP) will be carried out by different agency under different contract while the pipeline laying works are going on. For details of Temporary Cathodic Protection works, refer the enclosed Temporary Cathodic Protection Works attached elsewhere in tender documents.

9.36. Hydrostatic Testing

9.36.1. Pipelines

Hydrostatic testing of mainline shall exclude valves at terminals, SV's, DRS and online station. Hydrostatic Temporary test headers shall be provided and the mainline shall be hydrostatically tested between the temporary test headers only. The highest point of the test section shall be subjected to the minimum test pressure as specified below. The minimum hydrostatic test pressure in the pipeline during testing shall be as follows:

9.36.2. 1.5 times Design Pressure

- The maximum hydrostatic pressure shall not however exceed the pressure required to produce hoop stress equal to 95% of SMYS of pipe material based on the minimum wall thickness in the test section. The test duration shall be 24 hrs. Hydro test shall be done with corrosion inhibitor, wherever required. Mainline valves shall be installed after successful completion of hydrostatic pressure testing. Station

© Copy Right VCS Quality Services Pvt. Ltd. All rights reserved
Digitally signed by RACHNA SHUKLA
Date: 2025.03.13 12:53:14 IST

piping to be tested hydrostatically for minimum 6hours at pressure of 1.5 times Design Pressure.

- The pipeline string of HDD crossing shall be pre-tested for min. 6 hours and post-installation testing for min. 24 hours at 1.5 times the design pressure.
- The pipeline string of 500 m. and above shall be hydro-tested (post- installation) as per mainline hydro testing procedure.
- Control and instrumentation piping, actuators to be tested by Dry air or nitrogen at pressure of 1.1 x MOP (design pressure), test time– soaping time.
- In case any class location is upgraded due to requirements, the hydrotest pressure shall be governed by the actual class/ population density.
- Subsequent to separate hydro testing of pipeline and associated facilities, the Contractor shall carry out tie-in/ hook up. Pipes/ prefabricated assembly used for such tie-in shall be pre-tested to a test pressure specified for the pipeline. The Contractor at no extra cost shall provide all materials required for the fabrication of the test headers to Company. After successful completion of hydrostatic testing, the Contractor shall de water the pipeline as per the directions of Engineer-in-charge.
- For HDD, Pre-hydrotest, post-hydrotest and pipeline final hydrotest, contractor has to arrange soft water in view of alkalinity/ Salinity in the river water.

9.36.3. Dewatering & Swabbing

- It is envisaged that dewatering and swabbing operations shall be carried out as a part of pre-commissioning activities. Contractor shall take up dewatering of pipeline after hydrostatic testing only when Contractor is ready for swabbing operations. Till such time Contractor is ready to start pre-commissioning activities, the pipeline/ section of pipeline after hydrostatic testing shall be left filled with inhibited water. In case, if contractor proposes to dewater any test section for any reason depending upon site conditions (e.g., using test water for adjoining section due to non-availability of water), the Contractor shall swab such sections as per applicable requirements of Contract and fill the section with nitrogen at a pressure of 2 bar (g) with residual content of oxygen less than 1% v/v at no extra cost to the company. In no case shall the pipeline be kept empty i.e., without nitrogen filling.
- Transfer of test water from one test section to another section may be considered, however dosing additional quantity of corrosion inhibitor shall be done.
- Disposal of water (hydro testing) shall be done by Contractor after seeking necessary permission from concerned authority/ land owner so that no liability on this account comes on COMPANY.

9.36.4. Corrosion Inhibitor (Wherever applicable)

- The products to be used for corrosion inhibition of the water used for hydro testing and their dosage shall be as specified in Hydro test specification.
- Contractor (not the inhibitor manufacturer) shall get the inhibitor tested for

Format: C251151-00-FMT-001_00 © Copy Right VCS Quality Services Pvt. Ltd. All rights reserved
Digitally signed by RACHNA SHUKLA
Date: 2025.03.13 12:53:14 IST

corrosion inhibition and microbiological control efficiency from competent Govt/ PSU Laboratory. The test report shall be submitted to COMPANY for approval prior to undertaking hydro testing works. The dosage as recommended by COMPANY shall only be adopted. Necessary records for dosing of inhibitor should be maintained by the laying Contractor and such records should be handed over to COMPANY.

9.36.5. Terminal Facilities

- Piping facilities between the insulating joint and hook up point/ battery limit, sectionalizing valve stations and all above ground facilities installed by Contractor shall be hydrostatically tested to a test pressure equivalent to **1.5 times design pressure** as per "Flushing and Testing of Piping System" enclosed with the Contract document. All valves in the piping network being hydro tested shall be kept in the crack open position. Holding time shall be minimum **six hours**.

9.36.6. Preservation

- **The positive pressure shall be maintained at 2 bar (g)** in the pipeline during preservation. The necessary arrangements like valves, fittings, manpower etc. shall be kept for maintenance of pressure in the pipeline during idle time.

9.37. Direction of Construction

- The direction of construction shall be in the direction of flow, unless specified otherwise. In case the contractor proposes to carry out construction in direction opposite to direction of flow, the contractor may do so at no extra time and cost to Company and subject to Company Approval.

9.38. Leak Detection

- CONTRACTOR shall submit a detailed procedure for leak detection during hydro test. Such method of detection shall consume minimum possible time to complete the hydro test activity within contractual completion schedules. This procedure needs approval of the Engineer-in-charge.

- All works for locating and repair of major leak/ burst attributable to COMPANY (occurred during hydrostatic testing) including necessary repairing/ replacing/ cutting and removing out defective pipe length as defined in the specification and shall be payable as per relevant items of schedule of rates.

- All works for locating and repair of minor leak attributable to COMPANY (occurred during hydrostatic testing) which require sectionalizing of pipeline shall be payable as per relevant items of schedule of rates.

- Contractor shall carry out repairing/ replacing of defective pipe length including cutting and removing of defective pipes, pre testing of replacement pipe for 24 hours and welding into main line, NDT of the welds, coating of the weld joints, clean up, re-testing of pipeline including providing all equipment's, manpower & consumables.

9.39. Pre-Commissioning and Commissioning assistance of Pipeline

© Copy Right VCS Quality Services Pvt. Ltd. All rights reserved
Digitally signed by RACHNA SHUKLA
Date: 2025.03.13 12:53:14 IST

- Pipeline Contractor shall be responsible for pre-commissioning and commissioning assistance of the pipeline system being installed by him. The above shall include P&ID checks (with respect to requirement of design/ operation/ safety and interlocks of latest revision of P&IDs), flushing, tightness test, de-watering, as required and supply of consumables required during pre-commissioning and commissioning assistance. Contractor shall supply manpower, materials, equipment including consumables along with necessary piping and instrumentation connections for monitoring flow rate, pressure, temperature etc. temporary venting along with necessary piping, valves and instrumentation as well as consumables.

9.40. Commissioning

- Contractors shall mobilize all equipment, consumables and manpower for carrying out pigging, drying, inertization and commissioning activities.
- Whenever required, contractors shall provide commissioning assistance to other section/part contractor.
- Contractors shall engage a specialized team/ agency who have previously carried out such operations and shall develop procedures, supervise and monitor the entire operations, coordinate with other Contractor(s) as required till the time commissioning operations are completed. Contractor shall mobilize all equipment, materials, consumables including pigs, nitrogen and manpower etc. for commissioning activities. All necessary piping connection as required shall be carried out.
- Commissioning activities shall be carried out as per applicable specifications enclosed with Contract.

9.41. Priorities

- COMPANY may, at its sole option, assign priority of construction to any part of the total pipeline or terminal works. Contractor shall comply with such priority of execution without any time and cost implication to the COMPANY.

9.42. Terminal Piping Works

- The construction work shall be carried out based on Issued for Construction (IFC) drawings issued to Contractor at the time of construction. The final IFC drawings issued during execution stage may vary to some extent from the drawings included in the Bid Package. CONTRACTOR shall carry out all works in accordance with the IFC drawings and reference specifications/ documents with the Contract at no extra cost to the COMPANY.
- The piping fabrication, erection, welding, flushing and hydro testing and painting works shall be carried out as per standard piping specifications enclosed with Contract. The hydro test duration shall be minimum 6 hours.

9.43. Working in Areas of Existing Facilities

© Copy Right VCS Quality Services Pvt. Ltd. All rights reserved
Digitally signed by RACHNA SHUKLA
Date: 2025.03.13 12:53:14 IST

- For pipeline installation work within existing terminal facilities which are under operation, Contractor shall obtain all necessary permissions for working in/ around the facility including hot work permit as applicable and shall be fully responsible for the safety of the existing facilities/ areas during all phases of work and shall fully abide by and comply with the restrictions and conditions of COMPANY/ concerned authorities imposed on Contractor from time to time. Providing all safety appliances, gas detectors required during execution of the work, arranging of adequate firefighting equipment viz. fire brigade, fire extinguisher, shielding from existing facilities, oxygen mask etc. for carrying out the work safely to the satisfaction of COMPANY shall be done by the Contractor.

- Contractor may be permitted to work for limited hours in such places. For working on Sundays/ Holidays, the required permission may be obtained well in advance. During any emergency, work shall be suspended till further permission is obtained by Contractor. Idle period in case of interruption shall not be compensated to Contractor.

- The structure/ electric poles/ telegraph poles existing in the vicinity of proposed pipeline shall be properly taken care so that the stability of structure is not affected during construction.

9.44. Contractor Responsibilities

- Appraisal and taking cognizance of site-conditions, pipeline route, Central Government/state Govt. rules and regulations/ bye-laws, applicable Indian Standards and Codes, authorities having jurisdiction over the work site(s), environmental and pollution rules and regulations including conditions/ stipulations laid down by the concerned authorities etc. The CONTRACTOR is deemed to have recognized any restrictive features and constraints of the site(s), pipeline route and/ or specific requirements of the work and made due allowance for it in the work to be performed by him. Furnishing and mobilizing at site(s) of all construction equipment, manpower, tools and tackles, construction fronts, fully equipped and fully manned with other required support facilities etc.

- An onsite – offsite emergency plan shall be prepared and submitted to Disaster Management Authorities under intimation to respective state authorities.

- Company shall provide the available information and survey data along pipeline route and crossings. Company gives no guarantee or warranty as to the accuracy or completeness of the information provided. It is the Contractor's sole responsibility to obtain sufficient information / data along pipeline route and crossings to allow safe and sound design and installation of the proposed pipeline.

- "Receiving and taking over" of "free issue" Line pipes, Valves, Fittings etc. from BGL Store Yard location to Contractor Store yard/working site/material required location; Carrying out inspection of Line pipes at the time of receiving and taking-over, recording of pipe & coating defects at the time of taking over in the presence of Company's representative, carrying out repair of coating defects & pipe defects attributable to Company; including supply of materials, consumables & equipment's; handling, hauling and transportation from designated place of issue to Contractor Storage Yard; unloading and stacking of the line pipes at Contractor

© Copy Right VCS Quality Services Pvt. Ltd. All rights reserved
Digitally signed by RACHNA SHUKLA
Date: 2025.03.13 12:53:14 IST

Storage Yard; including arranging all equipment's, trailers, trucks & manpower; all works as per Scope of Work, drawings, PTS, GTS and other provisions of the Contract and instructions of Owner/ Owner's Representative; all associated works not indicated herein but required to complete the work as per Scope of Work, Provision of Contract & instructions of Owner/ Owner's Representative. If transportation of free issue Line pipes, valves **outside GA boundary (as per PNGRB)** is held as per the direction of Owner/ Owner's Representative is under contractor scope and for that cost shall bear by Client. For transportation within GA boundary (as per PNGRB) is under Contractor scope as mentioned.

- Interpretation and verification of data/information furnished by Company in respect of pipeline route surveys, crossing details, contained in the bid package. Any additional information/data/surveys etc. required by Contractor for detailed engineering and execution of the works shall be obtained by him. Company may assist him in obtaining such information/ data by issuing recommendatory letters.

- Entire design and detailed engineering including drawings and installation procedures, engineering for procurement & fabrication, engineering for installation including drawings, QA/QC procedures, etc. performed by the Contractor for complete pipeline system shall be reviewed and approved by Company. Contractor shall submit six sets of design/detailed engineering documents, drawings, procedures Company's review and approval. All works shall be executed based on approved documents only.

- Provide office and office support services/facilities for Company's Personnel at Contractor's design office for design review and approval of documents as per the requirement of the bid package.

- Review and approval of Contractor's entire work(s) by Company shall in no way relieve the Contractor of his sole responsibility for safe and efficient design, engineering, installation and subsequent operation of pipeline system.

- Furnishing and mobilizing at site(s) of all construction equipment, manpower, tools and tackles, construction spreads, fully equipped and fully manned with other required support facilities etc. commensurate for spreads needed for successful execution of the works.

- Contractor shall depute independent third-party inspector for carrying out radiographic inspection/ UT and interpretation of radiograph/ UT of welds. Third party inspector shall be approved by Company.

- Pre-commissioning/ commissioning of entire pipeline/piping system.

- Preparing and furnishing calculation books, pipe books, material/ purchase requisitions, final purchase orders including specifications, Vendor's data books (including Guarantees), fabrication and construction drawings, all survey reports, inspection and testing reports, as-built records for all phases of work.

- The Contractor is cautioned to exercise extreme care and take necessary precautions to prevent damage to the existing pipeline(s), facilities, electrical and other cables during execution of the entire works. Restoration/reconstruction of all structures/ facilities affected during pipeline construction shall be carried out by

© Copy Right VCS Quality Services Pvt. Ltd. All rights reserved
Digitally signed by RACHNA SHUKLA
Date: 2025.03.13 12:53:14 IST

Contractor.

- Wherever Contractor comes across water lines/open channels/drains in the fields used for cultivation, suitable arrangements similar to or higher specs. than the existing type shall be made by the Contractor for ensuring water supplies across the fields and maintain the same till construction is completed in that segmen Any claims arising out of non-compliance to the above requirements, as t by competent authorities shall be to Contractor's account.
- Contractor shall carry out all testing and inspection of materials, equipment etc. in independent testing institutions, laboratories, if so desired by Company.
- Disposal and treatment of treated hydro-testing water, excavated materials and surplus materials etc. as per local authority's requirements.
- Any other work not specifically listed but required for successful completion of entire pipeline system

9.45. Technical Requirements

The technical requirements for the pipeline laying as well as terminal works as defined herein shall be read in conjunction with Schedule of Rates, specifications, standards, drawings and other applicable documents enclosed with the Bid document. All piping/pipeline works shall be carried out as per following:

- Piping and Instrumentation Diagram (P&IDs) and line schedule.
- Approved for construction Piping General Arrangement Drawing (GADs).
- Approved for construction Alignment sheets/crossing drawings.
- Piping Material Specifications.
- Specifications.
- Piping support standards/drawings and support index.

10. AS BUILT DOCUMENTS

On successful completion of hydrostatic testing, the Contractor shall prepare As Built drawings/ reports for entire pipeline/piping system as specified in scope of work. All "As Built" drawings / reports shall be submitted as below.

Main Pipeline

- As laid alignment sheets and crossing drawings/details.
- As built HDD crossing details, as applicable.
- Details/ Drawings of Sectionalizing Valve (SV) stations.
- All Inspection, Testing and NDT records. Radiographs/ UT of all weld joints packed kilometer wise in separate card board boxes in one set.
- Pipe and calculation books/records.

Format: C251151-00-FMT-001_00 © Copy Right VCS Quality Services Pvt. Ltd. All rights reserved
Digitally signed by RACHNA SHUKLA Date: 2025.03.13 12:53:14 IST

- All inspection & testing documents.
- All purchase specification & procurement documents
- All piping GA drawings and supports at terminals.
- Installation and testing reports.
- All Inspection, Testing and NDT records. Radiographs/ UT of all weld joints.

Above list is minimum requirement.

Contractor shall prepare all documents as per the requirements indicated in Specification for Documentation for Pipeline Construction enclosed with the Contract document. In addition to the hard copy, three copies of final documents shall also be submitted in electronic media i.e., CD ROM/ DVD ROM diskettes and USB drive. Software used for the presentation of these documents shall be as follows: Type of document Software

- Reports MS Office (Word / Excel)
- Drawings AutoCAD

For the purpose of preparation of as-built drawings, Contractor shall update the "Issued for Construction" drawings provided by the Company. For drawings where electronic copies are available for IFC drawings, Contractor shall provide as built drawings in electronic form as well as in hard copies. Where only hard copies are available for IFC drawings, Contractor shall prepare and submit as built drawings in hard copies.

11. DOCUMENTS TO BE SUBMITTED AT TIME OF BIDDING

No technical documents are required to be submitted at the time of bidding. Bidder is advised to comply with all requirements of Bid document without any deviation. Company reserves the right to reject any bid with deviation without making any reference to the Bidder.

12. DOCUMENTS, SPECIFICATION, STANDARDS AND DRAWINGS

- Owner shall furnish piping and instrumentation diagrams (P&ID), preliminary plot plan along with the tender. Owner shall also supply design & engineering drawings and construction drawings including general arrangement drawings for piping, mechanical & instrumentation systems and other related/ required systems, at appropriate times and as requisitioned by contractor in his time schedule.

- Contractor shall prepare isometric drawings & bill of materials and submit the same for owner/ consultant's approval/ record. Contractor shall prepare drawing for utilities line as required as per sor and submit the same for owner/ consultant's approval/ record.

- No construction small or big shall be carried out without proper construction drawings duly approved by owner's engineers at delhi or site office or owner's representative duly authorized to do so. For mainline, route survey alignment sheets and crossing survey details shall be furnished along with bid by owner. However, detail-crossing drawings with crossing methodology shall be submitted by

© Copy Right VCS Quality Services Pvt. Ltd. All rights reserved
Digitally signed by RACHNA SHUKLA
Date: 2025.03.13 12:53:14 IST

contractor for prior approval. Any additional survey and data required to complete above should be done by contractor without any extra cost.

- After completion of construction & commissioning of terminal, contractor shall incorporate all the correction in drawings, prepare and issue the drawings "as-built drawings" as listed below to owner as final submission of drawings. For mainline pipeline alignment sheet, all x-ing details, all cp drawings, pipe book etc. And for terminals P&Id, layout drg., piping gad, isometric, all electrical & instrumentation drg, all civil drawings. For final submission only 4 sets of documents plus the original transparencies shall be handed over by contractor. Any construction done by contractor without duly approved drawings shall be wholly at his risk and cost. Contractor shall also submit soft copy of pipe book in excel along with hard copy. Soft copy of all as-built drawings shall be also submitted in autocad. Videography/ photograph of all major activities/ milestone achieved shall also be arranged and submitted by the contractor. For details of documentation to be submitted for mainline and terminal refer enclosed specification for documentation for standard specification for pipeline construction no. VCS-SS-PP-2001 enclosed elsewhere with the tender.

- **Specifications**

  The work shall be carried out by contractor strictly in accordance with the specifications enclosed in tender.

- **Additional Clauses**

  - Contractor to note that the minimum requirements of inspection and testing of the bought-out items shall be governed by attached gap with the tender document. However, contractor shall submit their gap in line with the requirement specified in attached gap for Owner's/ PMC's approval.
  - Contractor to note that all the documents/drawings submitted by them as a part of bid shall be considered only to assess bidder's technical capability and shall in no way absolve them from complying with all the requirements of the tender. All works to be performed by the bidder shall be strictly in accordance with tender conditions.
  - Contractor shall submit duly signed & stamped hard copies of all required documents/ drawings/ data sheets etc. to VCS for their review & approval as per terms & condition of tender documents. The date of receipt of these documents/ drawings/ data sheets etc. at VCS shall be deemed as the date of submission. If any documents/ drawings/ data sheets etc. require re-submission due to any error/ deficiency noticed during review/ approval stage, in that event the additional time required by the contractor to get the revised document/ drawing reviewed/approved by vcs shall be solely to contractor's account and in no case, contractor shall be entitled for any time or cost benefit**.**
  - The drawings/documents/ data sheets etc shall be reviewed, checked, approved and duly signed/stamped by successful contractor before submission. Revision number shall be changed and revisions shall be highlighted by clouds during submission of revised documents/drawings/data sheets by the successful contractor. Whenever the successful contractor require any sub-supplier drawings to be

© Copy Right VCS Quality Services Pvt. Ltd. All rights reserved

Digitally signed by RACHNA SHUKLA
Date: 2025.03.13 12:53:14 IST

reviewed/approved by VCS, the same shall be submitted by the contractor after review/ approval and stamped by the contractor. Direct submission of the sub-supplier's drawings/documents/data sheets etc without contractor's approval shall not be entertained.

- Review/approval of the contractor's submitted drawings/ documents/ data sheets etc by VCS would be only to review the compatibility with basic design and concepts including mainline work procedure and in no way absolve the successful contractor of his responsibility/contractual obligation to comply with tender requirements, applicable codes, specifications and statutory rules/regulations. Any error/deficiency noticed during any stage of manufacturing/execution/installation shall be promptly corrected by the contractor without any extra cost or time, whether or not comments on the same were received from VCS during the drawing review stage.
- Contractor shall make & maintain their own suitable sized storage yard/ area (covered as well as open space) to store free issue materials (FIM) in proper manner. Contractor shall also maintain the free issue material (FIM) in good condition during entire storage period by using all type of servicing / overhauling such as cleaning, greasing, protecting from rusting/ pitting etc.
- Storage yard/ area shall have proper motorable approach, adequate indoor & outdoor area lighting, potable & service water, proper rack & wooden sleeper etc. For staking/ storing the material, availability of material handling equipment of adequate capacity etc.
- Owner/PMC's site in-charge shall visit & inspect the contractor's storage yard/ area and upon his concurrence only, the FIM shall be stored by the contractor at the particular storage yard/ area. Delay in issuance of FIM due to non-acceptance of contractor's storage yard/ (i.e mainly because of non-compliance of the minimum condition as mentioned above for storage yard/ area) shall not be attributable to Owner/PMC.
- During construction, Owner / PMC, on their discretion, have reserve right to take samples for any bought-out item received at site and test the same in a NABL approved or equivalent laboratory even if the lot has already been inspected and cleared by PMC / Owner for use in construction. The cost for such testing shall be borne by the contractor. In case of failure of the samples, the lot shall be rejected and the same shall be replaced by the contractor without any additional cost to owner.

© Copy Right VCS Quality Services Pvt. Ltd. All rights reserved

Digitally signed by RACHNA SHUKLA
Date: 2025.03.13 12:53:14 IST

DATASHEETS

Digitally signed by RACHNA SHUKLA
Date: 2025.03.13 12:53:14 IST

Energising Quality	**PROJECT NUMBER - C251151**	M/s Bhagyanagar Gas Ltd.

DATA SHEET FOR INSULATING JOINT			Total Sheet		14
DOCUMENT NO.	C251151	00	PP	DS	2001

BHAGYANAGAR GAS LIMITED

LAYING & CONSTRUCTION OF U/G STEEL P/L NETWORK IN HYDERABAD OF M/s BGL

C1	03.02.2025	ISSUED FOR CLIENT REVIEW	PS	AG	MK
REV	**DATE**	**DESCRIPTION**	**PREP**	**CHK**	**APPR**

© Copy Right VCS Quality Services Pvt. Ltd. All rights reserved
Digitally signed by RACHNA SHUKLA
Date: 2025.03.13 12:53:14 IST

Data Sheet No.	**01**
Insulating Joint Manufacturer	-
IJ Material Requisition (MR)	-
IJ Specification No.	VCS-SS-PP-2029
DESIGN DATA FOR INSULATING JOINT	
Service, Design Life	NG, 25 yrs
Size (OD), mm (inch)	323.9 (12”)
Design Pressure	49 kg/cm^2 g
ANSI Rating/ Design Factor	300# / 0.5
Design Temperature (°C)	(-)29 to 65.0
Corrosion Allowance (mm)	1.5
Design Code (Pipeline / Insulating Joint)	ASME B31.8 / ASME Sec VIII Div. -I
End Connection/End Finish	Butt weld ends. Bevelled as per Line pipe Specification
Insulating Joint type	Monolithic
Installation	Above ground
Piggability	Piggable
Bevel end protection	Required, metallic or high impact plastic bevel protectors;
TESTING	
Charpy Impact Test	Required, at (-)29 °C
Hardness Test	Required, maximum hardness of base metal, weld metal & HAZ of all the pressure containing parts shall not exceed 248 HV10
Di-Electric test	5 KV AC, 50 Hz For One Minute Minimum
Insulation Resistance Test	Min. 25 Mega Ohms, when checked with 500-1000 v dc
Hydrostatic Test	At 73.5 Kg/cm^2 g for Minimum Time 30 Minute
Pneumatic Test	7 Kg/cm^2 g for minimum Time 15 Minutes.
Internal Vacuum Sustainability	One (1) Millibar
Torsional Test	Required, As per Specification

© Copy Right VCS Quality Services Pvt Ltd. All rights reserved
Digitally signed by RACHNA SHUKLA
Date: 2025.03.13 12:53:14 IST

Chemical Test	Required, As per Specification
Dimensional Check	Required, As per Specification & Approved Drawings
Visual Inspection	Required, As per Specification
Other Testing	Required, As per Specification
NDE	• Wet MPI on 100% Forged Surfaces (MSS SP 53) • 100% RT of Butt Weld (API 1104) • 100% UT / MPI of fillet welds (As per ASME SEC. VIII) • 100 % UT of Finished Bevel Ends • DP of Butt Weld - 100%
SURFACE PREPARATION, PAINTING & MARKING	
Surface Preparation	Shot Blasting to SP10 in accordance with "Steel Structures Painting Council- Visual Standard SSPC-VIS-I
Painting (Internal Coating)	Two-pack (solvent free) non-conducting epoxy compound (cold or hot curing). Total DFT –200 micron. Shade Brown
Painting- External (Non-conducting epoxy :3 Layer Paint System)	Primer: Two Pack Non-Conducting Epoxy, (Total DFT – 200 -micron) Finish Coat: Polyurethane Epoxy – DFT 100-micron, Shade Orange, The coating shall end approximately 75mm from the ends of the joint.
Final Colour Shade	Canary Yellow
Marking	On stainless-steel name plate as per Specification

INSULATING JOINT MATERIAL (EQUIVALENT OR SUPERIOR)

Part	Material of Construction	
	Specified	Offered
• Body	• ASTM A694 Gr. F52 (Charpy)	
Pups	• API 5L Gr. X-52, PSL2	
Epoxy resin Filler Material	• CIBA Araldite CY-220 & Araldite HT-951 hardener.	
Spacing Ring (Insulating Ring)	• Epoxy glass fibre reinforced laminate (comply with ASTM D 709 Type TV, Group G-11 properties) Average dielectric strength shall be minimum 15 KV. (Compressive Strength ≥ 450 MPa)	

© Copy Right VCS Quality Services Pvt Ltd. All rights reserved
Digitally signed by RACHNA SHUKLA
Date: 2025.03.13 12:53:14 IST

Sealing Ring /Gasket	• Hardness test, Viton ASTM D2000 or as per Vendor Recommendation	
Sealant Material	• Cold Curing Thermosetting Resin + Hardener. (Compressive Strength ≥ 150 MPa)	
Double Seal Requirement	• Yes	

CONNECTING PIPE DETAILS

S. No.	Outside Diameter, OD mm (inch)	Wall Thickness, (mm)/ Schedule	Material
1.	323.9 (12″)	6.4	API 5L Gr. X-52, PSL2

© Copy Right VCS Quality Services Pvt Ltd, All rights reserved
Digitally signed by RACHNA SHUKLA
Date: 2025.03.13 12:53:14 IST

Data Sheet No.	**02**
Insulating Joint Manufacturer	-
IJ Material Requisition (MR)	-
IJ Specification No.	VCS-SS-PP-2029
DESIGN DATA FOR INSULATING JOINT	
Service, Design Life	NG, 25 yrs
Size (OD), mm (inch)	273.1 (10")
Design Pressure	49 kg/cm^2 g
ANSI Rating/ Design Factor	300# / 0.5
Design Temperature (°C)	(-)29 to 65.0
Corrosion Allowance (mm)	1.5
Design Code (Pipeline / Insulating Joint)	ASME B31.8 / ASME Sec VIII Div. -I
End Connection/End Finish	Butt weld ends. Bevelled as per Line pipe Specification
Insulating Joint type	Monolithic
Installation	Above ground
Piggability	Piggable
Bevel end protection	Required, metallic or high impact plastic bevel protectors;
TESTING	
Charpy Impact Test	Required, at (-)29 °C
Hardness Test	Required, maximum hardness of base metal, weld metal & HAZ of all the pressure containing parts shall not exceed 248 HV10
Di-Electric test	5 KV AC, 50 Hz For One Minute Minimum
Insulation Resistance Test	Min. 25 Mega Ohms, when checked with 500-1000 v dc
Hydrostatic Test	At 73.5 Kg/cm^2 g for Minimum Time 30 Minute
Pneumatic Test	7 Kg/cm^2 g for minimum Time 15 Minutes.
Internal Vacuum Sustainability	One (1) Millibar
Torsional Test	Required, As per Specification

© Copy Right VCS Quality Services Pvt Ltd. All rights reserved
Digitally signed by RACHNA SHUKLA
Date: 2025.03.13 12:53:14 IST

Chemical Test	Required, As per Specification
Dimensional Check	Required, As per Specification & Approved Drawings
Visual Inspection	Required, As per Specification
Other Testing	Required, As per Specification
NDE	• Wet MPI on 100% Forged Surfaces (MSS SP 53) • 100% RT of Butt Weld (API 1104) • 100% UT / MPI of fillet welds (As per ASME SEC. VIII) • 100 % UT of Finished Bevel Ends • DP of Butt Weld - 100%
SURFACE PREPARATION, PAINTING & MARKING	
Surface Preparation	Shot Blasting to SP10 in accordance with "Steel Structures Painting Council- Visual Standard SSPC-VIS-I
Painting (Internal Coating)	Two-pack (solvent free) non-conducting epoxy compound (cold or hot curing). Total DFT –200 micron. Shade Brown
Painting- External (Non-conducting epoxy :3 Layer Paint System)	Primer: Two Pack Non-Conducting Epoxy, (Total DFT – 200 -micron) Finish Coat: Polyurethane Epoxy – DFT 100-micron, Shade Orange, The coating shall end approximately 75mm from the ends of the joint.
Final Colour Shade	Canary Yellow
Marking	On stainless-steel name plate as per Specification

INSULATING JOINT MATERIAL (EQUIVALENT OR SUPERIOR)

Part	Material of Construction	
	Specified	Offered
• Body	• ASTM A694 Gr. F52 (Charpy)	
Pups	• API 5L Gr. X-52, PSL2	
Epoxy resin Filler Material	• CIBA Araldite CY-220 & Araldite HT-951 hardener.	
Spacing Ring (Insulating Ring)	• Epoxy glass fibre reinforced laminate (comply with ASTM D 709 Type TV, Group G-11 properties) Average dielectric strength shall be minimum 15 KV. (Compressive Strength ≥ 450 MPa)	

© Copy Right VCS Quality Services Pvt Ltd. All rights reserved
Digitally signed by RACHNA SHUKLA
Date: 2025.03.13 12:53:14 IST

Sealing Ring /Gasket	• Hardness test, Viton ASTM D2000 or as per Vendor Recommendation	
Sealant Material	• Cold Curing Thermosetting Resin + Hardener. (Compressive Strength ≥ 150 MPa)	
Double Seal Requirement	• Yes	

CONNECTING PIPE DETAILS

S. No.	Outside Diameter, OD mm (inch)	Wall Thickness, (mm)/ Schedule	Material
1.	273.1 (10″)	6.4	API 5L Gr. X-52, PSL2

© Copy Right VCS Quality Services Pvt Ltd, All rights reserved
Digitally signed by RACHNA SHUKLA
Date: 2025.03.13 12:53:14 IST

Data Sheet No.	**03**
Insulating Joint Manufacturer	-
IJ Material Requisition (MR)	-
IJ Specification No.	VCS-SS-PP-2029
DESIGN DATA FOR INSULATING JOINT	
Service, Design Life	NG, 25 yrs
Size (OD), mm (inch)	168.3 (6”)
Design Pressure	49 kg/cm^2 g
ANSI Rating/ Design Factor	300# / 0.5
Design Temperature (°C)	(-)29 to 65.0
Corrosion Allowance (mm)	1.5
Design Code (Pipeline / Insulating Joint)	ASME B31.8 / ASME Sec VIII Div. -I
End Connection/End Finish	Butt weld ends. Bevelled as per Line pipe Specification
Insulating Joint type	Monolithic
Installation	Above ground
Piggability	Piggable
Bevel end protection	Required, metallic or high impact plastic bevel protectors;
TESTING	
Charpy Impact Test	Required, at (-)29 °C
Hardness Test	Required, maximum hardness of base metal, weld metal & HAZ of all the pressure containing parts shall not exceed 248 HV10
Di-Electric test	5 KV AC, 50 Hz For One Minute Minimum
Insulation Resistance Test	Min. 25 Mega Ohms, when checked with 500-1000 v dc
Hydrostatic Test	At 73.5 Kg/cm^2 g for Minimum Time 30 Minute
Pneumatic Test	7 Kg/cm^2 g for minimum Time 15 Minutes.
Internal Vacuum Sustainability	One (1) Millibar
Torsional Test	Required, As per Specification

© Copy Right VCS Quality Services Pvt Ltd. All rights reserved
Digitally signed by RACHNA SHUKLA
Date: 2025.03.13 12:53:14 IST

Chemical Test	Required, As per Specification
Dimensional Check	Required, As per Specification & Approved Drawings
Visual Inspection	Required, As per Specification
Other Testing	Required, As per Specification
NDE	• Wet MPI on 100% Forged Surfaces (MSS SP 53) • 100% RT of Butt Weld (API 1104) • 100% UT / MPI of fillet welds (As per ASME SEC. VIII) • 100 % UT of Finished Bevel Ends • DP of Butt Weld - 100%
SURFACE PREPARATION, PAINTING & MARKING	
Surface Preparation	Shot Blasting to SP10 in accordance with "Steel Structures Painting Council- Visual Standard SSPC-VIS-I
Painting (Internal Coating)	Two-pack (solvent free) non-conducting epoxy compound (cold or hot curing). Total DFT –200 micron. Shade Brown
Painting- External (Non-conducting epoxy :3 Layer Paint System)	Primer: Two Pack Non-Conducting Epoxy, (Total DFT – 200 -micron) Finish Coat: Polyurethane Epoxy – DFT 100-micron, Shade Orange, The coating shall end approximately 75mm from the ends of the joint.
Final Colour Shade	Canary Yellow
Marking	On stainless-steel name plate as per Specification

INSULATING JOINT MATERIAL (EQUIVALENT OR SUPERIOR)

Part	Material of Construction	
	Specified	Offered
• Body	• ASTM A694 Gr. F52 (Charpy)	
Pups	• API 5L Gr. X-52, PSL2	
Epoxy resin Filler Material	• CIBA Araldite CY-220 & Araldite HT-951 hardener.	
Spacing Ring (Insulating Ring)	• Epoxy glass fibre reinforced laminate (comply with ASTM D 709 Type TV, Group G-11 properties) Average dielectric strength shall be minimum 15 KV. (Compressive Strength ≥ 450 MPa)	

© Copy Right VCS Quality Services Pvt Ltd. All rights reserved
Digitally signed by RACHNA SHUKLA
Date: 2025.03.13 12:53:14 IST

Sealing Ring /Gasket	• Hardness test, Viton ASTM D2000 or as per Vendor Recommendation	
Sealant Material	• Cold Curing Thermosetting Resin + Hardener. (Compressive Strength ≥ 150 MPa)	
Double Seal Requirement	• Yes	

CONNECTING PIPE DETAILS

S. No.	Outside Diameter, OD mm (inch)	Wall Thickness, (mm)/ Schedule	Material
1.	168.3 (6″)	6.4	API 5L Gr. X-52, PSL2

© Copy Right VCS Quality Services Pvt Ltd, All rights reserved
Digitally signed by RACHNA SHUKLA
Date: 2025.03.13 12:53:14 IST

Data Sheet No.	**04**
Insulating Joint Manufacturer	-
IJ Material Requisition (MR)	-
IJ Specification No.	VCS-SS-PP-2029
DESIGN DATA FOR INSULATING JOINT	
Service, Design Life	NG, 25 yrs
Size (OD), mm (inch)	114.3 (4")
Design Pressure	49 kg/cm^2 g
ANSI Rating/ Design Factor	300# / 0.5
Design Temperature (°C)	(-)29 to 65.0
Corrosion Allowance (mm)	1.5
Design Code (Pipeline / Insulating Joint)	ASME B31.8 / ASME Sec VIII Div. -I
End Connection/End Finish	Butt weld ends. Bevelled as per Line pipe Specification
Insulating Joint type	Monolithic
Installation	Above ground
Piggability	Piggable
Bevel end protection	Required, metallic or high impact plastic bevel protectors;
TESTING	
Charpy Impact Test	Required, at (-)29 °C
Hardness Test	Required, maximum hardness of base metal, weld metal & HAZ of all the pressure containing parts shall not exceed 248 HV10
Di-Electric test	5 KV AC, 50 Hz For One Minute Minimum
Insulation Resistance Test	Min. 25 Mega Ohms, when checked with 500-1000 v dc
Hydrostatic Test	At 73.5 Kg/cm^2 g for Minimum Time 30 Minute
Pneumatic Test	7 Kg/cm^2 g for minimum Time 15 Minutes.
Internal Vacuum Sustainability	One (1) Millibar
Torsional Test	Required, As per Specification

© Copy Right VCS Quality Services Pvt Ltd. All rights reserved
Digitally signed by RACHNA SHUKLA
Date: 2025.03.13 12:53:14 IST

Chemical Test	Required, As per Specification
Dimensional Check	Required, As per Specification & Approved Drawings
Visual Inspection	Required, As per Specification
Other Testing	Required, As per Specification
NDE	• Wet MPI on 100% Forged Surfaces (MSS SP 53) • 100% RT of Butt Weld (API 1104) • 100% UT / MPI of fillet welds (As per ASME SEC. VIII) • 100 % UT of Finished Bevel Ends • DP of Butt Weld - 100%
SURFACE PREPARATION, PAINTING & MARKING	
Surface Preparation	Shot Blasting to SP10 in accordance with "Steel Structures Painting Council- Visual Standard SSPC-VIS-I
Painting (Internal Coating)	Two-pack (solvent free) non-conducting epoxy compound (cold or hot curing). Total DFT –200 micron. Shade Brown
Painting- External (Non-conducting epoxy :3 Layer Paint System)	Primer: Two Pack Non-Conducting Epoxy, (Total DFT – 200 -micron) Finish Coat: Polyurethane Epoxy – DFT 100-micron, Shade Orange, The coating shall end approximately 75mm from the ends of the joint.
Final Colour Shade	Canary Yellow
Marking	On stainless-steel name plate as per Specification

INSULATING JOINT MATERIAL (EQUIVALENT OR SUPERIOR)

Part	Material of Construction	
	Specified	Offered
• Body	• ASTM A694 Gr. F52 (Charpy)	
Pups	• API 5L Gr. X-52, PSL2	
Epoxy resin Filler Material	• CIBA Araldite CY-220 & Araldite HT-951 hardener.	
Spacing Ring (Insulating Ring)	• Epoxy glass fibre reinforced laminate (comply with ASTM D 709 Type TV, Group G-11 properties) Average dielectric strength shall be minimum 15 KV. (Compressive Strength ≥ 450 MPa)	

© Copy Right VCS Quality Services Pvt Ltd. All rights reserved
Digitally signed by RACHNA SHUKLA
Date: 2025.03.13 12:53:14 IST

Sealing Ring /Gasket	• Hardness test, Viton ASTM D2000 or as per Vendor Recommendation	
Sealant Material	• Cold Curing Thermosetting Resin + Hardener. (Compressive Strength ≥ 150 MPa)	
Double Seal Requirement	• Yes	

CONNECTING PIPE DETAILS

S. No.	Outside Diameter, OD mm (inch)	Wall Thickness, (mm)/ Schedule	Material
1.	114.3 (4″)	6.4	API 5L Gr. X-52, PSL2

© Copy Right VCS Quality Services Pvt Ltd, All rights reserved
Digitally signed by RACHNA SHUKLA
Date: 2025.03.13 12:53:14 IST

Notes:

1. The internal diameter of Insulating Joint shall be uniform through out the entire length and shall not be less than specified internal diameter of connecting Pipeline.
2. Insulating joint shall comply the requirement of Project Specification VCS-SS-PP-2029.
3. The Charpy Impact temperature shall be (-)29o C as specified in data sheet and shall supersede the temperature requirement specified in Specification
4. For the welding end, the out of roundness and tolerance on internal diameter at pipe ends shall be same as diameter tolerance for the pipe ends indicated in line Pipe Specification & API 5L.
5. Insulating Joint shall be suitable for all type of pigging operation including intelligent pigging.
6. Insulating Joint shall be monolithic boltless.
7. Vendor to ensure that all material specified herein/ offered is suitable for specified fluid type & design & operating Condition.
8. All applicable test (Impact, hardness, Chemical, mechanical etc) shall also be carried out on pup piece.
9. Overall isolating joint's length shall be such that the heat generated by field welding is not detrimental to the insulating, filler materials, and internal/external coating.
10. Vendor shall furnish the allowable forces & moments for the axial, lateral & transverse (i.e. X, Y & Z) directions
11. Manufacturing shall not commence until materials, dimension (including the calculation sheet), drawings, manufacturing process and welding procedure qualification selected by the Manufacturer are approved by COMPANY.
12. Manufacturer shall ensure that the wall thickness (W.T.) of all parts of insulating joint shall be adequate to sustain design pressure and selected W.T. shall be suitable for welding with W.T. of connected pipeline.

© Copy Right VCS Quality Services Pvt Ltd, All rights reserved
Digitally signed by RACHNA SHUKLA
Date: 2025.03.13 12:53:14 IST

Energising Quality	**PROJECT NUMBER: C251151**	

DATA SHEET FOR LONG RADIUS BEND			Total Sheets		09
Document No	C251151	00	PP	DS	2002

BHAGYANAGAR GAS LIMITED

LAYING & CONSTRUCTION OF U/G STEEL P/L NETWORK IN HYDERABAD OF M/s BGL

C1	03.02.2025	ISSUED FOR CLIENT REVIEW	PS	AG	MK
REV	**DATE**	**DESCRIPTION**	**PREP**	**CHKD**	**APPR**

© Copy Right VCS Quality Services Pvt. Ltd. All rights reserved.
Digitally signed by RACHNA SHUKLA
Date: 2025.03.13 12:53:14 IST

		Data Sheet No.	**01**
General	1.	Project Title	LAYING & CONSTRUCTION OF U/G STEEL P/L NETWORK IN HYDERABAD OF M/s BGL
	2.	Project No.	C251151
	3.	Item / Type	Factory made Pipeline Induction Bend – Butt Welded ends
	4.	Pipeline	NG
	5.	Installation / Location	Onshore – (Buried / Above Ground)
Design Data	6.	Design Code	ASME B31.8/ ASME B16.49
	7.	Design Specifications	Project Spec: VCS-SS-PP-2009
	8.	Design Factor	0.5
	9.	Line Size (inch)/(mm) "D"	NPS 12" / 323.9
	10.	Corrosion Allowance (mm)	0.5 mm
	11.	Min. Design Life (Years)	25
	12.	Operational Requirement	Shall be suitable for smooth Pigging operation in either direction
	13.	Environmental Data	Onshore application
	14.	End Finish	Bevelled As per Spec VCS-SS-PP-2009/ API 5L & Line pipe Specification
	15.	End Protection	Metallic or high impact plastic bevel protector (As per Spec VCS-SS-PP-2009)
Process Data	16.	Transported Medium	NG
	17.	Design Pressure (kg/cm^2g)/ASME Class	49
	18.	Max. / Min. Design Temp. of Pipe (^oC)	65 ^{o} / (-)29°
Connected Pipeline Data	19.	Pipeline Material & Grade	Carbon Steel API 5L GR. X-52
	20.	Type of Pipe	ERW
	21.	Nominal Wall Thickness (mm)	6.4/7.1
Mother Pipe for Bend	22.	Mother Pipe Material & Grade	Carbon Steel API 5L GR. X-52
	23.	Type of Pipe	ERW
	24.	Nominal Wall Thickness(mm)	6.4/7.1
Hot Induction Bend Data	25.	Manufacturing method	High Frequency continuous Induction heating and forming
	26.	Bend Procedure Qualification	As per Spec: VCS-SS-PP-2009

Digitally signed by RACHNA SHUKLA
Date: 2025.03.13 12:53:14 IST

	27.	Production Bending		As per Spec: VCS-SS-PP-2009
	28.	Bend Angle (Degree)		20° to 90°
	29.	Bending Radius		3D
	30.	Tangent Length(mm) "TL"		Either side 500mm or Pipe outside diameter whichever is more.
	31.	Weld Seam Position		±5° from the Neutral Axis
	32.	Maximum Thinning (%)		8
Inspection, Testing & Marking	33.	Visual Inspection		As per Spec: VCS-SS-PP-2009
	34.	Dimension & Tolerance	General	As per Spec: VCS-SS-PP-2009
			Out of Roundness – Ends	As per Spec: VCS-SS-PP-2008
			Bend angle	± 0.5°
			Bend Radius	± 1%
	35.	CVN Impact Test		At 0°
	36.	Minimum Mill Hydrotest Pressure		Test Pressure that shall result in Hoop Stress Corresponding to of 95% SMYS of Pipe Material.
	37.	Procedure Qualification		On 90° bend, as per Spec: VCS-SS-PP-2009
	38.	Thickness Measurement of Bend		As per Spec: VCS-SS-PP-2009
	39.	Gauging Requirement		As per Spec: VCS-SS-PP-2009
	40.	Hardness		As per Spec: VCS-SS-PP-2009
	41.	Certification		BS EN 10204 Type 3.2
Coating	42.	External Coating		As per Spec: VCS-SS-PP-2009

Digitally signed by RACHNA SHUKLA
Date: 2025.03.13 12:53:14 IST

		Data Sheet No.	**02**
General	43.	Project Title	LAYING & CONSTRUCTION OF U/G STEEL P/L NETWORK IN HYDERABAD OF M/s BGL
	44.	Project No.	C251151
	45.	Item / Type	Factory made Pipeline Induction Bend – Butt Welded ends
	46.	Pipeline	NG
	47.	Installation / Location	Onshore – (Buried / Above Ground)
Design Data	48.	Design Code	ASME B31.8/ ASME B16.49
	49.	Design Specifications	Project Spec: VCS-SS-PP-2009
	50.	Design Factor	0.5
	51.	Line Size (inch)/(mm) "D"	NPS 10" / 273.1
	52.	Corrosion Allowance (mm)	0.5 mm
	53.	Min. Design Life (Years)	25
	54.	Operational Requirement	Shall be suitable for smooth Pigging operation in either direction
	55.	Environmental Data	Onshore application
	56.	End Finish	Bevelled As per Spec VCS-SS-PP-2009/ API 5L & Line pipe Specification
	57.	End Protection	Metallic or high impact plastic bevel protector (As per Spec VCS-SS-PP-2009)
Process Data	58.	Transported Medium	NG
	59.	Design Pressure (kg/cm^2g)/ASME Class	49
	60.	Max. / Min. Design Temp. of Pipe (^oC)	65 ^{o} / (-)29°
Connected Pipeline Data	61.	Pipeline Material & Grade	Carbon Steel API 5L GR. X-52
	62.	Type of Pipe	ERW
	63.	Nominal Wall Thickness (mm)	6.4/7.1
Mother Pipe for Bend	64.	Mother Pipe Material & Grade	Carbon Steel API 5L GR. X-52
	65.	Type of Pipe	ERW
	66.	Nominal Wall Thickness(mm)	6.4/7.1
Hot Induction Bend Data	67.	Manufacturing method	High Frequency continuous Induction heating and forming
	68.	Bend Procedure Qualification	As per Spec: VCS-SS-PP-2009

Digitally signed by RACHNA SHUKLA
Date: 2025.03.13 12:53:14 IST

	69.	Production Bending		As per Spec: VCS-SS-PP-2009
	70.	Bend Angle (Degree)		20° to 90°
	71.	Bending Radius		3D
	72.	Tangent Length(mm) "TL"		Either side 500mm or Pipe outside diameter whichever is more.
	73.	Weld Seam Position		±5° from the Neutral Axis
	74.	Maximum Thinning (%)		8
Inspection, Testing & Marking	75.	Visual Inspection		As per Spec: VCS-SS-PP-2009
	76.	Dimension & Tolerance	General	As per Spec: VCS-SS-PP-2009
			Out of Roundness – Ends	As per Spec: VCS-SS-PP-2008
			Bend angle	± 0.5°
			Bend Radius	± 1%
	77.	CVN Impact Test		At 0°
	78.	Minimum Mill Hydrotest Pressure		Test Pressure that shall result in Hoop Stress Corresponding to of 95% SMYS of Pipe Material.
	79.	Procedure Qualification		On 90° bend, as per Spec: VCS-SS-PP-2009
	80.	Thickness Measurement of Bend		As per Spec: VCS-SS-PP-2009
	81.	Gauging Requirement		As per Spec: VCS-SS-PP-2009
	82.	Hardness		As per Spec: VCS-SS-PP-2009
	83.	Certification		BS EN 10204 Type 3.2
Coating	84.	External Coating		As per Spec: VCS-SS-PP-2009

Digitally signed by RACHNA SHUKLA
Date: 2025.03.13 12:53:14 IST

		Data Sheet No.	**03**
General	85.	Project Title	LAYING & CONSTRUCTION OF U/G STEEL P/L NETWORK IN HYDERABAD OF M/s BGL
	86.	Project No.	C251151
	87.	Item / Type	Factory made Pipeline Induction Bend – Butt Welded ends
	88.	Pipeline	NG
	89.	Installation / Location	Onshore – (Buried / Above Ground)
Design Data	90.	Design Code	ASME B31.8/ ASME B16.49
	91.	Design Specifications	Project Spec: VCS-SS-PP-2009
	92.	Design Factor	0.5
	93.	Line Size (inch)/(mm) "D"	NPS 6" / 168.3
	94.	Corrosion Allowance (mm)	0.5 mm
	95.	Min. Design Life (Years)	25
	96.	Operational Requirement	Shall be suitable for smooth Pigging operation in either direction
	97.	Environmental Data	Onshore application
	98.	End Finish	Bevelled As per Spec VCS-SS-PP-2009/ API 5L & Line pipe Specification
	99.	End Protection	Metallic or high impact plastic bevel protector (As per Spec VCS-SS-PP-2009)
Process Data	100.	Transported Medium	NG
	101.	Design Pressure (kg/cm^2g)/ASME Class	49
	102.	Max. / Min. Design Temp. of Pipe (^oC)	65 ^{o} / (-)29°
Connected Pipeline Data	103.	Pipeline Material & Grade	Carbon Steel API 5L GR. X-52
	104.	Type of Pipe	ERW
	105.	Nominal Wall Thickness (mm)	6.4/7.1
Mother Pipe for Bend	106.	Mother Pipe Material & Grade	Carbon Steel API 5L GR. X-52
	107.	Type of Pipe	ERW
	108.	Nominal Wall Thickness(mm)	6.4/7.1
Hot Induction Bend Data	109.	Manufacturing method	High Frequency continuous Induction heating and forming
	110.	Bend Procedure Qualification	As per Spec: VCS-SS-PP-2009

Digitally signed by RACHNA SHUKLA
Date: 2025.03.13 12:53:14 IST

	111.	Production Bending		As per Spec: VCS-SS-PP-2009
	112.	Bend Angle (Degree)		20° to 90°
	113.	Bending Radius		3D
	114.	Tangent Length(mm) "TL"		Either side 500mm or Pipe outside diameter whichever is more.
	115.	Weld Seam Position		±5° from the Neutral Axis
	116.	Maximum Thinning (%)		8
Inspection, Testing & Marking	117.	Visual Inspection		As per Spec: VCS-SS-PP-2009
	118.	Dimension & Tolerance	General	As per Spec: VCS-SS-PP-2009
			Out of Roundness – Ends	As per Spec: VCS-SS-PP-2008
			Bend angle	± 0.5°
			Bend Radius	± 1%
	119.	CVN Impact Test		At 0°
	120.	Minimum Mill Hydrotest Pressure		Test Pressure that shall result in Hoop Stress Corresponding to of 95% SMYS of Pipe Material.
	121.	Procedure Qualification		On 90° bend, as per Spec: VCS-SS-PP-2009
	122.	Thickness Measurement of Bend		As per Spec: VCS-SS-PP-2009
	123.	Gauging Requirement		As per Spec: VCS-SS-PP-2009
	124.	Hardness		As per Spec: VCS-SS-PP-2009
	125.	Certification		BS EN 10204 Type 3.2
Coating	126.	External Coating		As per Spec: VCS-SS-PP-2009

Digitally signed by RACHNA SHUKLA
Date: 2025.03.13 12:53:14 IST

		Data Sheet No.	**04**
General	127.	Project Title	LAYING & CONSTRUCTION OF U/G STEEL P/L NETWORK IN HYDERABAD OF M/s BGL
	128.	Project No.	C251151
	129.	Item / Type	Factory made Pipeline Induction Bend – Butt Welded ends
	130.	Pipeline	NG
	131.	Installation / Location	Onshore – (Buried / Above Ground)
Design Data	132.	Design Code	ASME B31.8/ ASME B16.49
	133.	Design Specifications	Project Spec: VCS-SS-PP-2009
	134.	Design Factor	0.5
	135.	Line Size (inch)/(mm) "D"	NPS 4" / 114.3
	136.	Corrosion Allowance (mm)	0.5 mm
	137.	Min. Design Life (Years)	25
	138.	Operational Requirement	Shall be suitable for smooth Pigging operation in either direction
	139.	Environmental Data	Onshore application
	140.	End Finish	Bevelled As per Spec VCS-SS-PP-2009/ API 5L & Line pipe Specification
	141.	End Protection	Metallic or high impact plastic bevel protector (As per Spec VCS-SS-PP-2009)
Process Data	142.	Transported Medium	NG
	143.	Design Pressure (kg/cm^2g)/ASME Class	49
	144.	Max. / Min. Design Temp. of Pipe (^oC)	65° / (-)29°
Connected Pipeline Data	145.	Pipeline Material & Grade	Carbon Steel API 5L GR. X-52
	146.	Type of Pipe	ERW
	147.	Nominal Wall Thickness (mm)	6.4/7.1
Mother Pipe for Bend	148.	Mother Pipe Material & Grade	Carbon Steel API 5L GR. X-52
	149.	Type of Pipe	ERW
	150.	Nominal Wall Thickness(mm)	6.4/7.1
Hot Induction Bend Data	151.	Manufacturing method	High Frequency continuous Induction heating and forming
	152.	Bend Procedure Qualification	As per Spec: VCS-SS-PP-2009

Digitally signed by RACHNA SHUKLA
Date: 2025.03.13 12:53:14 IST

	153.	Production Bending		As per Spec: VCS-SS-PP-2009
	154.	Bend Angle (Degree)		20° to 90°
	155.	Bending Radius		3D
	156.	Tangent Length(mm) "TL"		Either side 500mm or Pipe outside diameter whichever is more.
	157.	Weld Seam Position		±5° from the Neutral Axis
	158.	Maximum Thinning (%)		8
Inspection, Testing & Marking	159.	Visual Inspection		As per Spec: VCS-SS-PP-2009
	160.	Dimension & Tolerance	General	As per Spec: VCS-SS-PP-2009
			Out of Roundness – Ends	As per Spec: VCS-SS-PP-2008
			Bend angle	± 0.5°
			Bend Radius	± 1%
	161.	CVN Impact Test		At 0°
	162.	Minimum Mill Hydrotest Pressure		Test Pressure that shall result in Hoop Stress Corresponding to of 95% SMYS of Pipe Material.
	163.	Procedure Qualification		On 90° bend, as per Spec: VCS-SS-PP-2009
	164.	Thickness Measurement of Bend		As per Spec: VCS-SS-PP-2009
	165.	Gauging Requirement		As per Spec: VCS-SS-PP-2009
	166.	Hardness		As per Spec: VCS-SS-PP-2009
	167.	Certification		BS EN 10204 Type 3.2
Coating	168.	External Coating		As per Spec: VCS-SS-PP-2009

NOTES:

1. Bend shall be corrosive coated for transportation and storage.
2. Bends shall be supplied with end caps to prevent internal bevel damage during transport and to prevent internal corrosion during storage under exposed conditions.
3. Bend angle and bend quantity shall be as given in the Material Requisition for Induction.
4. Testing of chemical, mechanical properties and NDE to be done as per specification.
5. Anti-corrosive paint as per manufacturer standard to be provided.
6. Inspection shall be as per Inspection & Test plan (ITP).

Digitally signed by RACHNA SHUKLA
Date: 2025.03.13 12:53:14 IST

	CLIENT : BHAGYANAGAR GAS LIMITED		JOB NO : C251151	
	PROJECT : LAYING & CONSTRUCTION OF U/G STEEL P/L NETWORK IN HYDERABAD OF M/s BGL		DOC. NO.: C251151-00-PP-DS-2003A	
	DATA SHEET OF FE/BW, ABOVEGROUND, MANUAL BALL VALVE DN 50 TO DN 300 (NPS 2" to NPS 12"), RATING 300# , PIPING CLASS - 30HC, SPLIT /WELDED BODY DESIGN		No. of Pages : 02	Revision: C1 / 03.02.2025

Location		**HYDERABAD**		**MR No.**	**-**
Sr. No.		**-**		**P.O No.**	**#**
1	GENERAL	Valve Manufacturer			
2		Tag Numbers / Material Requisition Item No.		**-**	
3		Company's Specification No.		**VCS-SS-PP-2004**	
4		Category		**Station Piping Ball Valve**	
5		Pipeline Line No		**Not Required**	
6		Class		**30HC**	
7	DESIGN AND TEST REQUIREMENTS	Size		**DN 50 (NPS 2") to DN 300 (NPS 12")**	
8		Type of Valve		**Trunnion Mounted, Double Block and Bleed, Antistatic, Vent Drain/ Flush Connection with Anti Blowout Stem, Split Body Design/ Fully Welded Body Design as specified in MTO, Tight Shut Off (As Applicable)**	
9		Type of Port (Full/ Reduced)		**Refer MTO**	
10		Design Temperature (°C)	Maximum	**65**	
11			Minimum	**-29**	
12		Corrosion Allowance (mm)		**1.5**	
13		Installation (Aboveground/Underground)		**Aboveground**	
14		Service		**NATURAL GAS (NG)**	
15		End Connection		**Refer MTO**	
16		Flange Face Finish		**RF/125AARH for Flanged Ends (As applicable)**	
17		Design Standards		**API 6D**	
18		End Connection Standard		**ANSI B16.5 for Flanged Ends (As applicable)/ ANSI 16.25 for Butt Welded Ends (As applicable)**	
19		ASME Class		**300#**	
20		Stem Extension Requirement (If required, Note - 20)		**Not Required**	
21		Length of Stem Extension		**Not Applicable**	
22		Orientation of Stem		**Perpendicular to Valve axis**	
23		Type of Valve Operator		**DN ≤ 100 mm (4") - Wrench / Lever - Pull Force 350N max. DN ≥ 150 mm (6") - Gear Operated**	
24		Valve Actuator Operating Time		**Not Applicable**	
25		Requirement of Locking Mechanism (LO / LC)		**Refer P&ID**	
26		Length of Pup Piece / Nipple (mm), (If Required) (Note-16) (Integrally welded to the BW valve on each side)		**Required for Welded End Valves, as per Standard Valve Specification**	
27		Pup Piece Size / Material Grade / Schdeule/ Thickness (Note-16)		**As per Piping Material Specification**	
28		Operator Specification No.		**Not Applicable**	
29		Valve Design Pressure (kg/cm^2)		**49 kg/cm^2**	
30		Hydrostatic Test Pressure (kg/cm^2) & Time		**Body : 73.5 kg/cm^2 & Test Duration - 30 Minutes**	**Seat : 73.5 kg/cm^2 & Test Duration 30 Minutes**
31		Pneumatic Test Pressure (kg/cm^2) & Time		**7.0 kg/cm^2 & Test Duration as per API 6D**	
32		Charpy Impact Test (° C)		**Yes (at -29 °C)**	
33		Fire Safe Design (Note-24)		**API 6FA / ISO10497**	
34		Anti Static Testing Requirement		**As per API 6D Latest Edition**	
35		Hardness Test		**248 HV10 max**	
36		Painting (Note-21)		**As per specification (Suitable for Highly Corrosive Environment) Note-21**	
37		Operator Data Sheet No.		**Not Applicable**	
38	PROCESS DATA (Applicable for Actuator)	Flow (Min/Nor/Max) (m^3/hr)		**Not Applicable**	
39		Pressure (Min/Nor/Max) (barg)		**Not Applicable**	
40		Temperature (Min/Nor/Max) (° C)		**Not Applicable**	
41		Max Shutoff DP (barg)		**Not Applicable**	
42		Viscosity (cP)		**Not Applicable**	
43		Density (Kg/m^3)		**Not Applicable**	
44		Mol . Wt		**Not Applicable**	
45		Sp Heat Ratio (Cp/Cv)		**Not Applicable**	
46		Compressibility (Z)		**Not Applicable**	
47		Ambient Temperature		**Not Applicable**	
48	CONNECTING PIPE DETAIL	Outside Diameter (Inch)		**DN 50 (NPS 2") to DN 300 (NPS 12")**	
49		Thickness (mm) / Schedule		**As per Piping Material Specification**	
50		Pipe Material		**As per Piping Material Specification**	
51		Design Code		**ASME B31.8**	
52		ASME Rating		**300#**	
53		Piping Class		**30HC**	
54		Orientation of Pipe		**Suitable for all orientation**	

Digitally signed by RACHNA SHUKLA
Date: 2025.03.13 12:53:14 IST

	CLIENT : BHAGYANAGAR GAS LIMITED	**JOB NO : C251151**
	PROJECT : **LAYING & CONSTRUCTION OF U/G STEEL P/L NETWORK IN HYDERABAD OF M/s BGL**	**DOC. NO.: C251151-00-PP-DS-2003A**
	DATA SHEET OF FE/BW, ABOVEGROUND, MANUAL BALL VALVE DN 50 TO DN 300 (NPS 2" to NPS 12"), RATING 300# , PIPING CLASS - 30HC, SPLIT /WELDED BODY DESIGN	**No. of Pages : 02** — **Revision** C1 / 03.02.2025

Location	**HYDERABAD**	**MR No.**	**-**
Sr. No.	**-**	**P.O No.**	**#**

55	**VALVE MATERIAL**	**Part Description**	**Material Specified**	**Material Offered (By Bidder)**
56		Body	**ASTM A216 GR. WCB/ASTM 105**	
57		Ball (Single Piece, Solid Construction)	**SS-304 / SS-316 (Solid) OR (ASTM A105/ ASTM A216 Gr. WCB) + 75 micron ENP**	
58		Seat Rings (No Casting)	**(AISI 4140 +75 micron ENP)/ AISI 410/ SS 304/ SS 316**	
59		Seat Seal	**Primary Devlon V/ PEEK/ Viton with Secondary Metal to Metal**	
60		Stem (No Casting)	**(AISI 4140 +75 micron ENP)/ AISI 410 / SS 304 / SS 316**	
61		Stem Seal	**GRAFOIL / R-PTFE**	
62		Body Seal	**GRAFOIL / R-PTFE**	
63		Gland	**13% Cr. Steel/ SS 316 / SS 304 / ASTM A105**	
64		Stud Bolts/Nut	**ASTM A 193 Gr. B7/ ASTM A 194 Gr. 2H**	
65		Handle / Lever / Hand Wheel	**Carbon Steel**	

66	**DATA TO BE PROVIDE BY VENDOR (if Applicable)**	Valve Model No.		*
67		Flow Coefficient, Kv (Cubic Meters per Hour)		*
68		Valve Cavity Volume(CC)	Open position	*
69			Closed position	*
70		Operator Manufacturer / Model No.		*
71		Break-away Torque Under Max. Diff Pressure(Nm)		*
72		Running Torque (Open - Close/Close - Open) (Nm)		*

73	**NOTES**	**NOTES:**
74		1. Bidder to submit in offer, Soft Seal details and type, grade & class selected with manufacturer's recommendation like Pressure-Temperature Curve/Table for not to damage the soft seal during welding of valve ends at site.
75		2. This Data Sheet shall be read in conjunction with Material Requisition, Piping Material Specification, valve Specification & other Tender Documents.
76		3. Dimension / Input Data as & where marked " * " shall be supplied by Vendor.
77		4. Manufacturer shall have valid API 6D license to use API monogram. API monogram is required.
78		5. Valve design shall ensure repair of stem seals / packing under full line pressure.
79		6. 100.0 % Valve castings shall undergo Radiographic Examination.
80		7. Valves shall have support foot & lifting lugs as per valve Specification.
81		8. Valve design shall ensure repair of stem seals / packing under full line pressure.
82		9. Wrench operated valves shall be supplied with wrench.
83		10. The Charpy Impact temperature shall be -29°C as specified in data sheet and it shall superceded the Specification (VCS-SS-PP-2004) requirement at 0°C
84		11. A supplementary air seat test as per API 6D (Annex I, Para I.9 Type II) shall be carried out for all valves. A bubble tight seal is required without the use of any sealant. No leakage is allowed. Test pressure shall be held for at least 15 minutes.
85		12. Design of weld end valves shall be such that during field welding operations, the soft seals or plastic components of the valve (where ever used) is not liable to be damaged. The manufacture shall furnish necessary field welding instructions and post-weld test procedure to demonstrate integrity and leak-tightness of valves after field welding operations.
86		13. Gear operators, when provided, shall have a self-locking provision and shall be fully encased in water proof/ splash proof enclosure and shall be filled with suitable grease
87		14. For the manual operator of all valves, the diameter of the hand wheel or the length of operating wrench shall be such that under the maximum differential pressure, the total force required to operate the valve does not exceed 350N.
88		15. Manufacturer shall also indicate the number of turns of hand wheel in case of gear operators (along with their offer) required for Operating the valve from full open to full close position. The numbers of turn shall not exceed 250 for valves sizes up to 24" and 450 for valve size above 24".
89		16. Adequacy for Length of pup piece/ Nipple shall be confirmed by manufacturer so as to avoid damage to seats during field welding or post weld heat treatment.These nipples shall be welded to the valve body by the manufacturer before fitting the packings, seats & seals.
90		17. Name plate material shall be minimum stainless steel. Marking shall be as per MSS-SP-25
91		18. Valve body & other pressure containing parts shall be designed as per ASME Sec-VIII Div-I. Minimum thickness shall not be less than ASME B16.34.
92		19. For tag No./ Fluid Data/ Operating Data refer Process Document , P&IDs
93		20. Stem extension length shall be finalized during drawing approval stage after award of order.
94		21.For the valves to be installed underground the external surfaces of buried portion of the valve shall be painted with 100% Solid high build epoxy(Powercrete R-95) with a minimum dry film thickness of 1000 microns or 1.5 mm thick polyurethane coating
95		22. Bidder shall clearly write all / any deviation against each part material of valve in the space provided for. Wherever bidder agrees with company's spec bidder shall indicate "agreed". Flanges of flanged end cast/ forged body shall be integrally cast/ forged with the body of valve.
96		23. All Elastomereric material used for pressure tight sealing or drip sealing shall be of anti Explosive Decompression type and must be certified according to testing Procedures. Manufacturer shall submit test certificate confirming conformance with Anti Explosive Decompression. Manufacturer shall confirm the suitability of soft sealing and seating material for the pressure and temperature & service mentioned above in this data sheet.
97		24. Not only during commissioning, but also during life cycle of all valves, sediments/corrosion deposits/ silica/ mill scale of less than 40 mesh percent in process fluid have to be tolerated by all valves with malfunctioning.
98		24.Fire Safe test certificate qualifying the valves as per API 6FA/ API 607/ ISO 10497 carried out in last 10 years shall be furnished.
99		25. Flanges of flanged end cast/ forged body shall be integrally cast/ forged with the body of valve.Vendor to guarantee the suitability of seat/ seal material for the given service condition
100		26. Minimum all pressure containing and controlling parts of the valve shall be provided with EN 10204-3.2 certificate.
101		27. Cyclic test is required. The valve shall be subjected to at least 200 open close cycle with maximum differential pressure corresponding to valve rating.
102		28. Stem seal / body seal, gland packing materials shall be provided with corrosion inhibitor.
103		29. Vendor to guarantee the suitability of seat/ seal material for the given service condition

Digitally signed by RACHNA SHUKLA
Date: 2025.03.13 12:53:14 IST

	PROJECT : **LAYING & CONSTRUCTION OF U/G STEEL P/L NETWORK IN HYDERABAD OF M/s BGL**	
CLIENT	BHAGYANAGAR GAS LIMITED	
PMC	VCS QUALITY SERVICES PVT. LTD.	

DATA SHEET : BALL VALVE (LESS THAN 2.0 INCH) SOCKET WELDED (PIPING CLASS - 60HC)

GENERAL SPECIFICATION

Process Fluid	NG	**ANSI Pressure Rating**	800#
Design Temperature	(-)29°C to 65°C	**Design Pressure**	49 kg/cm2
Size, Inch (DN)	Less than 2" (50)		
Valve Type	Full Bore, Floating Ball		
End Connection Type	Socket Welded	**Design Standard**	BS EN ISO 17292
Face Finish	Not Applicable	**Locking Arrangement**	As per P&ID

VALVE DESIGN CONDITIONS

Corrosion Allowance	1.5 mm	**Design Factor**	0.5
Installation	Above Ground	**Stem Ext Length (mm)**	Not Applicable

VALVE OPERATION

Actuation Type	Not Applicable	**Type of Actuator**	Not Applicable

PUP PIECE DETAILS

100mm extension pups in ASTM A106 Gr.B, Sch 160 (for 3/4") and Sch XS (for 1 1/2")

VALVE MATERIAL SPECIFICATION

PART DESCRIPTION	MATERIAL SPECIFIED	MATERIAL OFFERED (Equivalent or Higher)
Body	ASTM A105	
Ball	13% Cr Steel	
Body Seat	RPTFE/ DELRIN	
Gland	13% Cr Steel	
Stem (No Casting)	13% Cr Steel	
Body Seal	Grafoil	
Stem Seal	Grafoil	
Body Studs/ Nuts	ASTM A193 Gr. B7/ A194 Gr. 2H	

TESTING REQUIREMENT

Hydrostatic Test Pressure & Time	Body: 210 kg/cm^2 & 30 Minutes	Seat: 155 kg/cm^2 & 30 Minutes
Pneumatic Test Pressure & Time	7 kg/cm2 & 15 Minutes	
Hardness Test	248 HV10 max.	
Charpy Impact Test @ Temperature	Yes (at -29°C)	
Anti-Static Testing Requirement	As per BS EN ISO 17292	
Fire Safe Test	API 607 / API 6FA	

DOCUMENT NO.							
C251139-00-PP-DS-2003C							
		C1	**03.02.2025**	**PS**	**AG**	**MK**	**ISSUED FOR BID**
SHEET NO.	**1 OF 2**	**REV**	**DATE**	**PRPD**	**CHKD**	**APVD**	**REMARKS**

Digitally signed by RACHNA SHUKLA
Date: 2025.03.13 12:53:14 IST

	PROJECT : **LAYING & CONSTRUCTION OF U/G STEEL P/L NETWORK IN HYDERABAD OF M/s BGL**	
CLIENT	BHAGYANAGAR GAS LIMITED	
PMC	VCS QUALITY SERVICES PVT. LTD.	

DATA SHEET : BALL VALVE (LESS THAN 2.0 INCH) SOCKET WELDED

Valve Painting Specification :

1	Surface Preparation by Short Blasting as per grade SA 2 1/2, Swedish Standard SIS-055 909.
2	For above ground installation - Three coats of corrosion resistant paint shall be applied with minimum thickness of 300 micron (Permissible thickness in each coat shalll be within 80 to 120 micron). Colour of paint shade shall be RAL-7038, however any change in colour shall be finalized during drawing approval stage.
3	Lock open/ lock close requirement : **As indicated in P&ID / Schedule of Rates (SOR).**

NOTES :

1	This Data Sheet shall be read in conjunction with Tender Documents & Specifications.
2	Material test certificates and hydrostatic test reports shall be furnished prior to dispatch.
3	Gland Packing Assembly shall permit repair of gland packing under full line pressure.
4	Detailed dimensional drawings showing cross-section with part numbers and materials shall be submitted for purchaser's approval prior to manufacture of the valves.
5	All valves shall be provided with valve position indicator.
6	Separate wrench shall be provided with each wrench operated valve.
7	Stops shall be provided to ensure positive alignment of ball with ports and ensure proper installation of handle.
8	The Charpy Impact Test temperature specified in datasheet shall supersede the specification requirements.
9	Painting procedure of valves shall be as per Manufacturer's standard.
10	All tests shall be as per BS EN 12266.
11	Inspection and Testing shall be as per attached QAP, this datasheet, BS EN 12266, other relevant standards.
12	Minimum all pressure containing and controlling parts of the valve shall be provided with EN 10204-3.2 certificate.

Digitally signed by RACHNA SHUKLA
Date: 2025.03.13 12:53:14 IST

	PROJECT : **LAYING & CONSTRUCTION OF U/G STEEL P/L NETWORK IN HYDERABAD OF M/s BGL**	
CLIENT	BHAGYANAGAR GAS LIMITED	
PMC	VCS QUALITY SERVICES PVT. LTD.	

DATA SHEET : BALL VALVE (LESS THAN 2.0 INCH) FLANGED END (PIPING CLASS - 30HC)

GENERAL SPECIFICATION

Process Fluid	NG	**ANSI Pressure Rating**	300#
Design Temperature	(-)29°C to 65°C	**Design Pressure**	49 kg/cm2
Size, Inch (DN)	Less than 2" (50)		
Valve Type	Full Bore / Reduced Bore, Floating Ball		
End Connection Type	Flanged End	**Design Standard**	BS EN ISO 17292
Face Finish	ASME B16.5, 300#,RF/125AARH	**Locking Arrangement**	As per P&ID

VALVE DESIGN CONDITIONS

Corrosion Allowance	1.5 mm	**Design Factor**	0.5
Installation	Above Ground	**Stem Ext Length (mm)**	Not Applicable

VALVE OPERATION

Actuation Type	Not Applicable	**Type of Actuator**	Not Applicable

PUP PIECE DETAILS

Not Applicable

VALVE MATERIAL SPECIFICATION

PART DESCRIPTION	MATERIAL SPECIFIED	MATERIAL OFFERED (Equivalent or Higher)
Body	ASTM A105	
Ball	13% Cr Steel	
Body Seat	RPTFE/ DELRIN	
Gland	13% Cr Steel	
Stem (No Casting)	13% Cr Steel	
Body Seal	Grafoil	
Stem Seal	Grafoil	
Body Studs/ Nuts	ASTM A193 Gr. B7/ A194 Gr. 2H	

TESTING REQUIREMENT

Hydrostatic Test Pressure & Time	Body: 73.5 kg/cm^2 & 30 Minutes	Seat: 73.5 kg/cm^2 & 30 Minutes
Pneumatic Test Pressure & Time	7 kg/cm2 & 15 Minutes	
Hardness Test	248 HV10 max.	
Charpy Impact Test @ Temperature	Yes (at -29°C)	
Anti-Static Testing Requirement	As per BS EN ISO 17292	
Fire Safe Test	API 607 / API 6FA	

DOCUMENT NO.							
C251151-00-PP-DS-2003B							
		C1	**03.02.2025**	**PS**	**AG**	**MK**	**ISSUED FOR BID**
SHEET NO.	**1 OF 2**	**REV**	**DATE**	**PRPD**	**CHKD**	**APVD**	**REMARKS**

Digitally signed by RACHNA SHUKLA
Date: 2025.03.13 12:53:14 IST

	PROJECT : **LAYING & CONSTRUCTION OF U/G STEEL P/L NETWORK IN HYDERABAD OF M/s BGL**	
CLIENT	**BHAGYANAGAR GAS LIMITED**	
PMC	VCS QUALITY SERVICES PVT. LTD.	

DATA SHEET : BALL VALVE (LESS THAN 2.0 INCH) FLANGED END

Valve Painting Specification :

1	Surface Preparation by Short Blasting as per grade SA 2 1/2, Swedish Standard SIS-055 909.
2	For above ground installation - Three coats of corrosion resistant paint shall be applied with minimum thickness of 300 micron (Permissible thickness in each coat shalll be within 80 to 120 micron). Colour of paint shade shall be RAL-7038, however any change in colour shall be finalized during drawing approval stage.
3	Lock open/ lock close requirement : **As indicated in P&ID**

NOTES :

1	This Data Sheet shall be read in conjunction with Tender Documents & Specifications.
2	Material test certificates and hydrostatic test reports shall be furnished prior to dispatch.
3	Gland Packing Assembly shall permit repair of gland packing under full line pressure.
4	Detailed dimensional drawings showing cross-section with part numbers and materials shall be submitted for purchaser's approval prior to manufacture of the valves.
5	All valves shall be provided with valve position indicator.
6	Separate wrench shall be provided with each wrench operated valve.
7	Stops shall be provided to ensure positive alignment of ball with ports and ensure proper installation of handle.
8	The Charpy Impact Test temperature specified in datasheet shall supersede the specification requirements.
9	Painting procedure of valves shall be as per Manufacturer's standard.
10	All tests shall be as per BS EN 12266.
11	Inspection and Testing shall be as per attached QAP, this datasheet, BS EN 12266, other relevant standards.
12	Minimum all pressure containing and controlling parts of the valve shall be provided with EN 10204-3.2 certificate.

Digitally signed by RACHNA SHUKLA
Date: 2025.03.13 12:53:14 IST

DATASHEET FOR MDPE BALL VALVE

1	Fluid Service	Natural Gas
2	Nominal Outside Diameter (OD)	20mm,32mm, 63mm, 125mm, 180mm
3	End to End Dimension (Minimum)	250mm, 300mm, 350mm, 500mm respectively
4	Model	Vendor to specify
5	Standard	EN 1555-4
6	Pressure Class	PE 80 / SDR 11
7	Design Pressure (Bar g)	10.0
8	Operating pressure (Bar g)	4.0
9	Design Temperature (Deg. C)	60
10	Operating Temperature (Deg.C)	25
11	Location	Underground
12	Pattern	Full Bore
13	Valve Type	Extended Pipe at Both End
14	End	Plain
15	Stem	Without Stem
16	Valve Operation	By Operating key or Extension Spindle
17	Valve Design	1 piece construction
18	Ball position indicator	Open / close indicator required
19	Mechanical stops	For open / close limits required
20	Tests	As per EN 1555-4 and QAP.

0	13.04.17	ISSUED FOR REVIEW & COMMENTS	GS	AD	GSJ
Rev	Date	Description	Author	Checked	Approved

Digitally signed by RACHNA SHUKLA
Date: 2025.03.13 12:53:14 IST

Energising Quality	**LAYING OF MDPE NETWORK AND GI / COPPER INSTALLATION**	

TECHNICAL DATA SHEET FOR PLB HDPE DUCT

Quantity	HDPE Duct	As per MR
Dimensions & Tolerances:	Outer Diameter (mm)	50 ± 0.5
	Wall Thickness (mm)	4.0 ± 0.3
	Thickness of inside lubrication	10% of Pipe Thickness
	Lubrication	Permanently lubricated for blowing of Optical Fibre Cable
	Ovality (mm)	1.4
	Standard Length (m)	500 ± 100
	Maximum OD of Optical Fibre Cable (mm)	16
HDPE Raw Material	Material Grade	PE 63
	Minimum Required Strength (MRS) at 20^0C	6.3 Mpa
	Max. Allowable Hydrostatic Design Stress at 20^0C	4.0 Mpa
	Density at 27°C	940 – 958.4 Kg/M^3
	Melt Flow Rating (MFR)	0.2 to 1.1 gm/10 minutes at 190°C under 5 kg load
Visual appearance	Surface Finish	Duct is smooth, clean, and free from grooving and other defects
Performance Requirement	Heat Reversion	Max. 3 %
	Hydrostatic Pressure Resistance Test	**Acceptance Test:** Duration: 48 hrs at 80° Induced Stress: 3.8 Mpa **Type Test:** Duration: 165 hrs at 80° Induced Stress: 3.5Mpa
	Tensile Strength	Min. 20 N/mm^2
	Elongation	350%
	Impact Strength	As per IS: 12235 (Part – 9), 1989
	Internal Co-efficient of Friction	0.06 (max.) when tested with respect to Nylon
	Minimum bending radius during storage	1.25 m
	Maximum pulling force	320 Kg
	Anti-oxidant content of finished Duct	0.3 % Max.
	UV Stabilizer Content of Resin	0.15 % (Min.)
NOTE:	**STS : SUPPLIER TO SUGGEST**	
1	a) Dimensional outlet with model number, Part list and technical literatures.	
	b) Installation, Operation and Maintenance Instruction manual.	
	c) Testing and Inspection Procedure	
	d) Test certificate from statutory bodies Inspection Certificate.	

Energising Quality	**DATA SHEET FOR PLB HDPE DUCT**	**Document No.**	**Rev.**
		VPC-DS-PE-0023	**0**
		SHEET 1 of 1	

Digitally signed by RACHNA SHUKLA
Date: 2025.03.13 12:53:14 IST

PIPING MATERIAL SPECIFICATION

Digitally signed by RACHNA SHUKLA
Date: 2025.03.13 12:53:14 IST

Energising Quality	**PROJECT NUMBER: C251151**	BGL

PIPING MATERIAL SPECIFICATION			Total Sheets		28
Document No	C251151	00	PP	PMS	2001

BHAGYANAGAR GAS LIMITED

LAYING & CONSTRUCTION OF U/G STEEL P/L NETWORK IN HYDERABAD GA OF M/S BGL

C1	04.03.2025	ISSUED FOR CLIENT REVIEW	PS	AG	MK
REV	**DATE**	**DESCRIPTION**	**PREP**	**CHKD**	**APPR**

© Copy Right VCS Quality Services Pvt. Ltd. All rights reserved
Digitally signed by RACHNA SHUKLA
Date: 2025.03.13 12:53:14 IST

ABBREVIATION

ANSI	American National Standards Institute
ASME	American Society of Mechanical Engineers
ASTM	American Society for Testing and Materials
AARH	Arithmetic Average Roughness Height
BS	British Standards
CS	Carbon Steel
MS	Mild Steel
IS	Indian Standard Code
NFPA	National Fire Protection Association
OISD	Oil Industry Safety Directorate
PNRGB	Petroleum & Natural Gas Board
ERW	Electric Resistance Welding
BE	Bevel End
BW	Butt Welded
FF	Flat Face
PBE	Plain Both End
PE	Plain End
RF	Raised Face
SCRF	Screwed End - Female
SCRM	Screwed End - Male
CA	Corrosion Allowance
M	To Match Pipe

© Copy Right VCS Quality Services Pvt. Ltd. All rights reserved
Digitally signed by RACHNA SHUKLA
Date: 2025.03.13 12:53:14 IST

CONTENTS

1.0 INTRODUCTION 4
2.0 CODES AND STANDARDS 4
3.0 MATERIAL SPECIFICATIONS 4
4.0 CLASS DESIGNATION CODE 5
5.0 TECHNICAL REQUIREMENTS 5
6.0 PIPELINE 6
7.0 PIPES 6
8.0 FITTINGS 7
9.0 BENDS 7
10.0 FLANGES 7
11.0 GASKETS 9
12.0 BOLTING & THREADS 9
13.0 THREAD SEALANT 9
14.0 VALVES 9
15.0 QUICK OPENING END CLOSURE 11
16.0 HYDROTESTING VENTS AND DRAINS 11
17.0 PIPING SPECIATLITY ITEMS 11
18.0 INSULATING GASKET, SLEEVE AND WASHER 11
19.0 CHARPY V-NOTCH TEST & HARDNESS TEST 13
APPENDIX – A PIPING MATERIAL SPECIFICATION – INDEX 14
APPENDIX – B PIPING CLASS 16

© Copy Right VCS Quality Services Pvt. Ltd. All rights reserved
Digitally signed by RACHNA SHUKLA
Date: 2025.03.13 12:53:14 IST

1.0 INTRODUCTION

This specification covers minimum requirements for the material specification for pipe, fittings, flanges, line blinds, bolts, gaskets, and valves that shall be used for natural gas pipeline and associated facilities in accordance with ASME B31.8, OISD-226 and PNGRB guideline.

This specification also defines, by piping class for each listed service, and defines the pressure/temperature limitations within which they may be used.

This specification shall be read in conjunction with various codes and standards as applicable.

2.0 CODES AND STANDARDS

Pipeline and pipeline terminal facilities envisaged as part of this project shall be designed and engineered primarily in accordance with the provisions of the latest edition of the following codes:

ASME 31.3	:	Process Piping
ASME 31.8	:	Gas Transmission and Distribution Piping Systems
OISD STD-226	:	Natural Gas Transmission Pipeline and City Gas Distribution Networks
PNGRB	:	Petroleum and Natural Gas Regulatory Board

All codes, standards and specifications referred herein shall be the latest edition of such documents.

For sake of brevity the initials of the society to which the codes are referred may be omitted in the specifications, for example, B16.5 is a code referring to ASME A106 is a code referring to ASTM.

In addition to this PMS, various piping and pipeline materials shall also be applicable.

3.0 MATERIAL SPECIFICATIONS

Individual piping class has been generally designed to cover a set of service operating within pressure-temperature consideration as per ASME B16.5/ B16.34 or part of it. Deviations of material from class specifications may occur due to specific design conditions and/or availability. These deviations are permissible if they equal or better the individual class requirements and shall be subjected to approval on case-to-case basis.

© Copy Right VCS Quality Services Pvt. Ltd. All rights reserved
Digitally signed by RACHNA SHUKLA
Date: 2025.03.13 12:53:14 IST

4.0 CLASS DESIGNATION CODE

The piping class designation shall generally consist of three digits made up of a letter, number & letter e.g. 15HC, 15HLT, 30HC, 30 HLT etc. as follows:

First two numerals letter indicates ASME class rating, e.g.

15 - 150 Class

30 - 300 Class

The first alphabet indicates differences in the Fluid Services within the same class rating and material, e. g. H stands for Hydrocarbon, W stands for Water, G stands for Galvanize etc.

The last one or two letter (as applicable) indicates type of material, e.g.

C - Carbon steel

LT - Low Temperature (Carbon Steel)

5.0 TECHNICAL REQUIREMENTS

5.1 General Notes

1. All piping materials selected under this specification shall be in compliance with the project specification.
2. Material selections shall comply with the maximum pressure and temperature limitation as specified in the service summary.
3. Substitution of equivalent materials is subject to approval of the Client /PMC. All requests for substitution shall be accompanied with sufficient data, drawings and descriptive details to permit evaluation by the Client /PMC.
4. Cast iron, ductile or malleable iron, aluminum, plastic or copper-bearing alloys shall not be used in hydrocarbon service.
5. Piping design pressure is based on flange maximum-allowable working pressure, unless otherwise noted in Job Specification.
6. When required, impact testing shall comply with applicable standards and material specifications.
7. All gaskets shall be asbestos free.
8. Aluminum jumper shall be provided across the flanged joint and length of the bolt shall be taken such that at least two threads remain exposed after the nut for fixing the continuity jumper.

© Copy Right VCS Quality Services Pvt. Ltd. All rights reserved
Digitally signed by RACHNA SHUKLA
Date: 2025.03.13 12:53:14 IST

5.2 Units

1. All units are expressed in SI system with the exception of nominal pipe sizes (NPS) and bolting diameters, which are in inches.
2. Pressures are gauge pressures (in Kg/cm^2g) and temperatures are in deg. Celsius (°C).
3. Pressures and Temperatures ratings are based ASME 16.5.

6.0 PIPELINE

- Line pipe material grade and wall thickness details are indicated in PMS.

7.0 PIPES

- Carbon steel pipe shall be made by open hearth, electric furnace or basic oxygen process only. The steel used shall be fully killed and made with fine grain structure. The grade and wall thickness of various sizes of pipes shall be as per piping material specification for the applicable class.
- Pipe dimensions shall be in accordance with ASME B 36.10 for carbon steel ASTM standard pipes & API 5L for carbon steel API 5L grade pipes.
- All pipe threads shall conform to American Standard taper as per ASME B 1.20.1 NPT, unless otherwise specified.
- For butt weld end, bevel shall be in accordance with API specification 5L or ASME B16.25 as applicable.
- Where difference in thickness of matching pipe ends exist, bevels for such matching pairs shall be prepared in accordance with ASME B 31.8.
- Pipes shall be supplied with beveled end. Beveling shall be in accordance with ASME B16.25. Where plain end pipes are specified, as for small bore pipes for socket welded piping, the pipes shall be supplied with square cut ends.
- All pipe threads shall conform to American Standard taper as per ASME B 1.20.1 NPT, unless otherwise specified.
- Dimensions of socket weld ends shall confirm to ASME B 16.11. Bore shall match pipe OD and pipe ID.
- Pipe to pipe joints shall be made as follows:

For sizes upto & including DN40	Socket weld/ As per Piping Class
For size DN50 and above	Butt Welded

© Copy Right VCS Quality Services Pvt. Ltd. All rights reserved
Digitally signed by RACHNA SHUKLA
Date: 2025.03.13 12:53:14 IST

8.0 FITTINGS

- Fully killed carbon steel shall be used in the manufacture of fittings. The fitting shall have carbon equivalent not exceeding 0.45, based on check analysis.
- Threaded joints, if used, shall conform to American Standard taper as per ASME B1.20.1 NPT.
- Dimensions of socket welded/screwed fittings shall conform to ASME B 16.11. Swage shall be as per BS 3799.
- Dimensions of steel butt welded fittings shall be as per ASME B 16.9.
- Bore of socket welded fittings shall suit outside diameter (OD) of pipe and its thickness.
- Butt welding ends shall conform to API specification 5L or ASME B 16.25 as applicable. In case of difference in thickness of matching ends, requirements of ASME B 31.4 shall apply.
- Integrally reinforced forged branch fittings such as Sockolet, Weldolet etc. shall be as per MSS-SP-97. Fittings not covered in ASME B16.9 and MSS-SP-97 shall conform to manufacturer's standard.
- Fittings thickness tolerances shall match pipe thickness tolerance.

9.0 BENDS

- Unless otherwise specified for process piping, elbow of radius R = 1.5 D shall only be used.
- In order to accommodate changes in vertical and horizontal alignment in piggable section of pipeline, Elastic bends/ Cold field bends/ Hot formed long radius bends shall be used. Radius of bend shall be as per Design Basis.

  D = Specified Outside Diameter
- Miters shall not be used.

10.0 FLANGES

- Pressure Temperature rating of flanges shall conform to B16.5/ MSS-SP44/ B16.47 Series A, as applicable.
- Dimensions of flanges shall be in accordance with B16.5/ MSS-SP44/ B16.47 Series A, as applicable.
- Neck of weld neck (WN) flanges shall suit pipe bore and thickness.
- Bore of socket welded (SW) flanges shall suit pipe O.D. and its thickness.
- Threads for screwed flanges, if used, shall conform to American Standard taper as per ASME B 1.20.1 NPT.
- Sizes for blind flanges shall be indicated by nominal pipe size.

© Copy Right VCS Quality Services Pvt. Ltd. All rights reserved
Digitally signed by RACHNA SHUKLA
Date: 2025.03.13 12:53:14 IST

- Unless specified otherwise in Piping Material Specification the flange face finish shall be as per ASME B16.5.
- Butt welding ends of WN flanges shall conform to ASME B 16.25.
- Spectacle blind/spacer & blinds shall be in accordance with ASME B 16.48/ manufacturer's standard.
- Flange face finish for raised face flanges shall be as per ASME B16.5/ ASME B 16.47 as applicable. For RTJ flanges groove finish shall be 32-63 micro inches AARH as per MSS-SP-6. Hardness of groove surface shall be minimum 140 BHN.
- Butt welding ends of WN flanges shall conform to ASME B 16.25.
- Spectacle blind/spacer & blinds shall be in accordance with ASME B16.48 / manufacturer's standard.
- Two jackscrews, 180° apart shall be provided for all RTJ flange assemblies and Spacer blind/ Figure 8 assemblies. Holes for jackscrews shall be drilled and tapped at site. Jackscrews shall be as per ASTM A193 Gr. B7. Heads of jackscrews shall be heavy hexagonal type and jackscrew end shall be rounded. Dimensions shall be as per ASME B18.2.1.
- Flanges shall be packed and shipped in such a way as to prevent damage of machined parts.
- All machined or threaded parts shall be protected in accordance with ASTM A700. Suitable protection shield, or cover shall be provided on the gasket contact surface.
- Carbon steel forgings shall be supplied with a maximum carbon content of 0.25% and CE of 0.45 by product analysis.
- The finish of contact faces of pipe flanges & connecting end flanges of valves & fittings shall be governed by ASME B16.5 & following:

  Roughness requirements (Finish: AARH standards per ASME B46.1):

  a) Raised Face (RF): Serrated finish 125 to 250 µin Ra.

  b) Flat Face (FF): Serrated finish 125 to 250 µin Ra.

  c) Ring Type Joint (RTJ): Extra-smooth finish 63 µin Ra max.
- Flat face flanges, unless specified on the Piping Specifications, shall not be used without specific Client/PMC approval. Full-face gaskets shall be used with flat-face flanges as per ASME B16.20.
- All flanged joints shall be installed with a single gasket between contact faces.
- Spectacle blank (figure 8 blank), blank (blind) & spacer shall confirm to the requirement of ASME B16.48 up to sizes 24". For 150#, 300# and 600# spectacle blank shall be used up to 8", blank (blind) & spacer for sizes 10" & above

© Copy Right VCS Quality Services Pvt. Ltd. All rights reserved
Digitally signed by RACHNA SHUKLA
Date: 2025.03.13 12:53:14 IST

11.0 GASKETS

- Spiral wound metallic gasket with Graphite filled winding with SS304 inner ring and CS outer ring/ Soft iron octagonal ring type joint gasket, and shall conform to ASME B 16.20/ API 601
- Spiral wound gaskets shall be self-aligning type.

12.0 BOLTING & THREADS

- Nuts for stud bolts shall be American Standard Hexagon Heavy Series and double chamfered.
- Dimension and tolerances for stud bolts and nuts shall be as per ASME B18.2.1 and 18.2.2 with full threading to ASME B 1.1 Class 2A thread for bolts and Class 2B for nuts. Diameter and length of stud bolts shall be as per ASME B16.5/ASME B16.47 with full threading.
- Threads for nuts shall be as per ASME B 1.1 as follows:

  Nuts for stud bolts Dia ¼" to 1" : UNC-2B
  Nuts for stud bolts Dia 1⅛" to 3¼" : 8UN-2B

- Threads for stud bolts shall be as per ASME B 1.1, as follows:

  Stud bolts Dia ¼" to 1" : UNC-2A
  Stud bolts Dia 1⅛" to 3¼" : 8UN-2A

- Threads for threaded pipe, fitting, flanges and valve shall be in accordance with B1.20.1 taper threads, unless specified otherwise.
- Heads of jack screws shall be heavy hexagonal type. Jack screw end shall be rounded. Stud bolts shall be fully threaded with two hexagonal nuts.

13.0 THREAD SEALANT

- Threaded joints shall be made with 1" wide PTFE jointing tape.

14.0 VALVES

- Valve ends shall be as per valve data sheets for various piping class.
- Sectionalizing valves, Block valves and other isolation valves installed on the main pipeline shall be ball valves with butt welding ends. All inline isolation valves on the mainline (pipeline) shall be full bore valves to allow smooth passage of cleaning as well as intelligent pigs.
- All buried valves shall be provided with stem extension shall have Butt Welded ends as per relevant specification/ data sheet.

© Copy Right VCS Quality Services Pvt. Ltd. All rights reserved
Digitally signed by RACHNA SHUKLA
Date: 2025.03.13 12:53:14 IST

- All valves in the piggable section of pipeline and Main Process Flow Line shall be Full Opening valve as per API 6D. Other valves shall be Reduced Opening type unless specified otherwise in P&ID.
- Flange dimensions and face finish of flanged end valves shall conform to clause 10.0 of this specification.
- Butt welding ends of Butt Welded valves shall conform to ASME B 16.25.
- Face to face and end to end dimensions shall conform to applicable standards.
- Valves shall conform to following standards unless specified otherwise in piping material specification for various piping class.

Flanged/Socket Welded end valves (1½" and below)
Design STD. for Process lines

Gate Valves	:	API 602
Globe Valves	:	BS EN ISO 15761
Check Valves	:	BS EN ISO 15761
Ball Valve	:	BS EN ISO 17292
Plug Valve	:	BS 5353

Flanged/Butt Welded end valves (2" and above)
Design STD. for Process Lines

Gate Valves	:	API 6D
Globe Valves	:	BS 1873
Check Valves	:	API 6D
Ball Valve	:	API 6D
Plug Valve	:	API 6D

- All manual operated valves shall be provided with wrench / hand wheel or gear operator as specified here in below.
- **Gate Valves**

For ANSI class 150 and 300	-	Hand wheel operated for size ≤ 12" NB. Gear operated for size ≥ 14" NB.
For ANSI class 600	-	Hand wheel operated for size ≤ 10" NB. Gear operated for size ≥ 12" NB.

- **Globe Valves**

© Copy Right VCS Quality Services Pvt. Ltd. All rights reserved
Digitally signed by RACHNA SHUKLA
Date: 2025.03.13 12:53:14 IST

For ANSI class 150, 300, 600 and 900 - Hand wheel operated for all Size.

- **Ball Valves & Plug Valves**

For all ANSI class - Wrench operated for size ≤ 4" NB.
Gear operated for size ≥ 6" NB.

- **Actuated Valves**

Actuated valves shall be as per P&IDs. The actuator shall have provision for remote operation as per P & IDs. All Actuated valves shall have additional provision of hand wheel operation.

15.0 QUICK OPENING END CLOSURE

Quick opening end closure to be installed on scraper traps shall be designed in accordance with Section VIII of ASME Boiler and Pressure Vessel Code and equipped with safety locking devices in compliance with Section VIII, division 1, UG-35.2 of ASME Boiler and Pressure Vessel Code.

16.0 HYDROTESTING VENTS AND DRAINS

In terminal piping, high point vents and low point drains required for the purpose of hydro testing shall be of size 0.75". These vents & drains shall consist of gate valves with blind flange assembly.

17.0 PIPING SPECIATLITY ITEMS

- Primary material Pipeline specialty items viz. flow tees, insulating joints, LR bends etc. shall be as per respective data sheets and specification.
- For mainline items, corrosion allowance shall be as per respective data sheet.

18.0 INSULATING GASKET, SLEEVE AND WASHER

The insulating gasket shall consist of a PTFE (Teflon) spring-energized face seal, or an elastomeric O-ring, seated in an isolating laminate, which shall be permanently bonded to a high strength metal gasket core. Due to this unique pressure activated sealing mechanism, the gasket requires far less bolt stress to seal than any other gasket. The gasket inner diameter shall be exactly matched to the flange bore to eliminate turbulent flow and flange face erosion/ corrosion. The seal elements shall be replaceable in the reusable gasket retainer. The core of gasket shall be made of annealed 316 stainless steel or other metals including duplex and Inconel etc.

Insulating gasket shall include the following applications,

- Flange isolation in conjunction with Cathodic protection.

© Copy Right VCS Quality Services Pvt. Ltd. All rights reserved
Digitally signed by RACHNA SHUKLA
Date: 2025.03.13 12:53:14 IST

- Isolation between dissimilar metals to prevent galvanic corrosion.
- Mating mismatched ring-joint to raised –face flanges.
- Eliminate fluid trap corrosion between ring-joint (RTJ) flanges where high concentrations of Co2, H2S and other aggressive hydrocarbon media are present.
- Eliminate turbulence and flow induced erosion between ring-joint (RTJ) flanges.
- Protect against coating impingement on coated flange faces.
- To seal between flanges subjected to vibration/ cavitation.

18.1 Insulating Gaskets, Sleeves and Washer Materials Properties

Compressive Strength	:	65000 psi
Average Dielectric Strength	:	15 kV or more
Electrical Resistance	:	>1 MΩ (When tested with 500-1000 V DC merger)
Max. Operating Temperature	:	302°F (150°C)
Min. Operating Temperature	:	(-) 200°F (-129°C)
Water Absorption	:	5%
Flexural Strength	:	70000 psi
Tensile Strength	:	50000 psi
Bond Strength	:	2600 lb.
Shear Strength	:	22000 lb.

18.2 Seal Material

The sealing elements shall intend to provide an impervious barrier through which no contained media or other substance can penetrate. The composite retainer backing material behind the seal remains uncontaminated and thus permanently holds the seal in place in a static, fully encapsulated manner.

Viton as a seal material shall consist following properties,

- General purpose oilfield elastomer.
- Excellent resistance to aliphatic hydrocarbons, glycols and H2S.
- Good resistance to aromatic hydrocarbons.

Isolating Sleeve

© Copy Right VCS Quality Services Pvt. Ltd. All rights reserved
Digitally signed by RACHNA SHUKLA
Date: 2025.03.13 12:53:14 IST

Mylar as a seal material shall consist following properties,

- Spiral wound Mylar is a general-purpose material recommended for bolting application with flange temperatures below 250°F.
- Material shall be fair resistance to crushing, cracking, breaking and thread pinch.

Isolating washer: 1/8" (0.125) Thick washer

Steel Washer: ZPS standard – Zinc plated steel washers.

Butt weld (BW) ends of the insulating assembly shall be protected by metallic or high impact plastic bevel protectors.

The dimensions of insulating components (gaskets, sleeves and washers) shall be as indicated in Data Sheet. The insulating gasket and washers shall have adequate compressive strength to permit proper tightening of flange bolts for leak proof joint.

The insulating material shall be suitable for pressure and temperature indicated in Data Sheet under connecting pipeline details and shall be resistant to the fluid to be handled through the pipeline.

I.D. and O.D. of insulating washers shall be designed to fit over insulating sleeves and within spot faces on flanges.

After the hydrostatic test, insulating flange assembly shall be tested with air at 5 kg/cm2 for 10 minutes. The tightness shall be checked by immersion or with a frothing agent. No leakage shall be accepted.

Insulating gasket, sleeve and washer after the field hydrostatic test shall be tested for dielectric integrity at 5000 V A.C., 50 Hz for one minute and the leakage current before and after shall be equal. Testing time, voltage and leakage shall be recorded and certified. The test shall be carried out in dry conditions.

19.0 CHARPY V-NOTCH TEST & HARDNESS TEST

All piping material like valves, fittings, flanges bolting etc. shall be Charpy impact tested. Charpy V-notch impact tests are required for the base metal weld metal and heat-affected zone (HAZ)

© Copy Right VCS Quality Services Pvt. Ltd. All rights reserved
Digitally signed by RACHNA SHUKLA
Date: 2025.03.13 12:53:14 IST

Appendix – A

Piping Material Specification – Index

© Copy Right VCS Quality Services Pvt. Ltd. All rights reserved
Digitally signed by RACHNA SHUKLA
Date: 2025.03.13 12:53:14 IST

Sr. No.	Piping Class	Rating	C. A. (MM)	Spl. Reqt.	Basic Material	Service	Remarks
1	15HC	150	1.5	NON IBR	CARBON STEEL	NON-CORROSIVE PROCESS-FLAMMABLE /NONFLAMMABLE, NON LETHAL- HYDROCARBONS	Page 16
2	30HC	300	1.5	NON IBR	CARBON STEEL	NON-CORROSIVE PROCESS-FLAMMABLE / NONFLAMMABLE, NON LETHAL- HYDROCARBONS	Page 22

© Copy Right VCS Quality Services Pvt. Ltd. All rights reserved
Digitally signed by RACHNA SHUKLA
Date: 2025.03.13 12:53:14 IST

Appendix – B

Piping Class

© Copy Right VCS Quality Services Pvt. Ltd. All rights reserved
Digitally signed by RACHNA SHUKLA
Date: 2025.03.13 12:53:14 IST

PIPE CLASS	**15HC**
DESIGN CODE	ASME B31.8
RATING	150#
BASE MATERIAL	CARBON STEEL
CA	1.5 MM
SPECIAL REQUIREMENT	Non IBR
SERVICE	Natural Gas, Utilities (water, inst. air, plant air, nitrogen, carbon dioxide)

Temperature (Deg. C) and Pressure (Kg/cm^{2}g) Ratings

Temperature	-29	38	93	149	204	260	316	343	371
Pressure	20.03	20.03	18.28	16.17	14.06	11.95	9.84	8.78	7.73

NOTES:

1. All vents and drains shall be provided with gate valve with blind flange assembly unless otherwise indicated in P&ID.
2. NDT of welds shall be as follows:

   Radiography : All butt welds 100%

   MPI : Socket welds 100%
3. Piping design as per ASME B 31.8, OISD 226 & PNGRB Guidelines
4. Charpy V notch test and hardness test shall be conducted for pipes, fittings and flanges at (-) 29°C.
5. All branch connections including vent, drain, pressure and temperature connection shall be as per branch connection table.
6. For valves, refer valve data sheets.

ITEM	SIZE	DESCRIPTION
Maintenance joints	ALL	Flanged, to be kept minimum
Pipe joints	1.5" & BELOW	SW coupling
	2.0" & ABOVE	Butt welded
Drains	ON LINES <= 1.5"	Refer std. Drawing
	ON LINES >= 2.0"	As per P&ID or 0.75". Refer std. Drawing
Vents	ON LINES <= 1.5"	Refer std Drawing
	ON LINES >= 2.0"	As per P&ID or 0.75". Refer std. Drawing

© Copy Right VCS Quality Services Pvt. Ltd. All rights reserved

Digitally signed by RACHNA SHUKLA
Date: 2025.03.13 12:53:14 IST

Temp. Connection	1.5"	Flanged, installation as per std. Drawing, except skin temperature measurement.
Press. Connection	0.75"	SW nipple with Plug/ Ball Valve to spec. as per Refer std. Drawing

Branch Table

														T	**24**	**BRANCH PIPE (INCH)**
													T	T	**20**	
												T	T	T	**18**	
											T	T	T	T	**16**	
										T	T	T	T	T	**14**	
									T	T	T	T	T	T	**12**	
								T	T	T	T	T	T	T	**10**	
							T	T	T	T	T	T	T	W	**8**	
						T	T	T	T	T	T	W	W	W	**6**	
					T	T	T	W	W	W	W	W	W	W	**4**	
				T	T	T	W	W	W	W	W	W	W	W	**3**	
			T	T	T	W	W	W	W	W	W	W	W	W	**2**	
		T	T	T	T	S	S	S	S	S	S	S	S	S	**1.5**	
	T	T	T	T	S	S	S	S	S	S	S	S	S	S	S	**0.75**
T	T	T	T	S	S	S	S	S	S	S	S	S	S	S	S	**0.05**
0.05	**0.75**	**1**	**1.5**	**2**	**3**	**4**	**6**	**8**	**10**	**12**	**14**	**16**	**18**	**20**	**24**	
PIPE RUN Size (INCH)																

CODES	DESCRIPTION
T	Tees
W	Weldolet
S	Sockolet

© Copy Right VCS Quality Services Pvt. Ltd. All rights reserved
Digitally signed by RACHNA SHUKLA
Date: 2025.03.13 12:53:14 IST

Item	Lower Size (Inch)	Upper Size (Inch)	Sch. / Thk.	Dmn. STD	Material	Description
PIPE GROUP						
PIPE	00.500	02.000	XS	B-36.10	ASTM A 106 GR.B	PE, SEAMLESS
PIPE	03.000	03.000	STD	B-36.10	ASTM A 106 GR.B	BE, SEAMLESS
PIPE	04.000	04.000	6.4 mm	B-36.10	ASTM A 106 GR.B (Charpy)	BE, SEAMLESS
PIPE	06.000	12.000	STD	B-36.10	ASTM A 106 GR.B (Charpy)	BE, SEAMLESS
NIPPLE	00.500	01.500	M	B-36.10	ASTM A 106 GR.B	PBE, SEAMLESS
FLANGE GROUP						
FLNG.SW	00.500	01.500	M	B-16.5	ASTM A 105	150, RF/ 125AARH
FLNG.WN	2.000	12.000	M	B-16.5	ASTM A 105 (Charpy)	150, RF/ 125AARH
FLNG.BLIND	00.500	01.500		B-16.5	ASTM A 105	150, RF/ 125AARH
FLNG.BLIND	00.500	12.000		B-16.5	ASTM A 105 (Charpy)	150, RF/ 125AARH
FLNG.FIG.8	00.500	08.000		ASME B16.48	ASTM A 105 (Charpy)	150, FF/ 125AARH
SPCR&BLND	10.000	12.000		ASME B16.48	ASTM A 105 (Charpy)	150, FF/ 125AARH
FITTING GROUP						
ELBOW.90	00.500	01.500		B-16.11	ASTM A 105	SW, 6000
ELBOW.90	02.000	12.000	M	B-16.9	ASTM A 234 GR.WPB (Charpy)	BW, 1.5D
ELBOW.45	00.500	01.500		B-16.11	ASTM A 105	SW, 6000
ELBOW.45	02.000	12.000	M	B-16.9	ASTM A 234 GR.WPB (Charpy)	BW, 1.5D
T.EQUAL	00.500	01.500		B-16.11	ASTM A 105	SW, 6000
T.EQUAL	02.000	12.000	M	B-16.9	ASTM A 234 GR.WPB (Charpy)	BW
T.RED	00.500	01.500		B-16.11	ASTM A 105	SW, 6000

© Copy Right VCS Quality Services Pvt. Ltd. All rights reserved
Digitally signed by RACHNA SHUKLA
Date: 2025.03.13 12:53:14 IST

Item	Lower Size (Inch)	Upper Size (Inch)	Sch. / Thk.	Dmn. STD	Material (Charpy)	Description
T.RED	02.000	12.000	M, M	B-16.9	ASTM A 234 GR.WPB (Charpy)	BW
REDUC. CONC	02.000	12.000	M, M	B-16.9	ASTM A 234 GR.WPB (Charpy)	BW
REDUC. ECC	02.000	12.000	M, M	B-16.9	ASTM A 234 GR.WPB (Charpy)	BW
SWAGE. CONC	00.500	03.000	M, M	BS-3799	ASTM A 105 (Charpy)	PBE
SWAGE.ECC	00.500	03.000	M, M	BS-3799	ASTM A 105	PBE
CAP	00.500	00.750		B-16.11	ASTM A 105	SCRF, 6000
CAP	01.000	01.500		B-16.11	ASTM A 105	SCRF, 3000
CAP	02.000	12.000	M	B-16.9	ASTM A 234 GR.WPB (Charpy)	BW
PLUG	00.500	00.750		B-16.11	ASTM A 105	SCRM, 6000
O'let						
WELDOLET	02.000	06.000	M, S160	MSS-SP97	ASTM A 105 (Charpy)	BW
SOCKOLET	00.500	00.750		MSS-SP97	ASTM A 105	SCRF, 6000
SOCKOLET	01.000	01.500		MSS-SP97	ASTM A 105	SW, 3000
VALVES GROUP						
VLV.GLOBE	00.250	01.500		BS EN 1SO 15761	BODY-ASTM A 105,TRIM-STELLITED,STEM-13%CR STEEL	SW, 800, 3000, B-16.11
VLV.GLOBE	02.000	12.000		BS-1873	BODY-ASTM A 216 GR.WCB,TRIM- 13% CR.STEEL	FLGD, 150, B-16.5, RF/125AARH
VLV.CHECK	00.250	01.500		BS EN 1SO 15761	BODY-ASTM A 105,TRIM-STELLITED	SW, 800, 3000, B-16.11
VLV.CHECK	02.000	12.000		API-6D	BODY-ASTM A 216 GR.WCB,TRIM- 13% CR.STEEL	FLGD, 150, B-16.5, RF/125AARH
Item	**Lower Size (Inch)**	**Upper Size (Inch)**	**Sch. / Thk.**	**Dmn. STD**	**Material (Charpy)**	**Description**

© Copy Right VCS Quality Services Pvt. Ltd. All rights reserved

Digitally signed by RACHNA SHUKLA
Date: 2025.03.13 12:53:14 IST

VLV.BALL	00.500	01.500		BS EN 1SO 17292	BODY-ASTM A 105,TRIM-13% CR.STEEL, SEAT-RPTFE	SW, 800, B-16.5, RF/125AARH
VLV.BALL	02.000	12.000		API-6D	BODY-ASTM A216 GR.WCB,TRIM/BALL SEAT-(AISI 4140 + 0.003"ENP)/AISI 410	FLGD, 150, B-16.5, RF/125AARH
VLV.BALL	02.000	12.000		API-6D	BODY-ASTM A 216 GR.WCB, TRIM-BALL, SEAT-(AISI 4140 + 0.003"ENP) /AISI 410	BW, 150, B-16.25
VLV.PLUG	00.500	01.500		BS-5353	BODY-ASTM A 105,PLUG - A105 + 0.003" ENP	SW, 800, 3000, B-16.11,
VLV.PLUG	02.000	12.000		API-6D	BODY- A 216GR. WCB, PLUG: A216 GR.WCB + 0.003" ENP	FLGD, 150, B-16.5, RF/125AARH
VLV.PLUG	02.000	12.000	M	API-6D	BODY-ASTM A 216 GR.WCB, PLUG: A216 GR.WCB + 0.003"ENP	BW, 150, B-16.25
BOLT GROUP						
BOLT.STUD	00.500	12.000		B-18.2	BOLT:A193 GR.B7, NUT:A194 GR.2H	
GASKET GROUP						
GASKET	00.500	12.000		B-16.20-ANSI B16.5	SP.WND METTALIC WITH GRAPHITE FILLER	SPIRAL, 150

Note: For all Valves, valve data sheets shall also be referred, stringent requirement among data sheet and above details shall be followed.

© Copy Right VCS Quality Services Pvt. Ltd. All rights reserved
Digitally signed by RACHNA SHUKLA
Date: 2025.03.13 12:53:14 IST

PIPE CLASS	**30HC**
DESIGN CODE	ASME B31.8
RATING	300#
BASE MATERIAL	CARBON STEEL
CA	1.5 MM
SPECIAL REQUIREMENT	Non IBR
SERVICE	Natural Gas, Utilities (water, inst. air, plant air, nitrogen, carbon dioxide)

Temperature (Deg. C) and Pressure (Kg/cm^{2}g) Ratings

Temperature	-29	38	93	149	204	260	316
Pressure	52.02	52.02	47.45	46.05	44.64	42.18	40.66

NOTES:

1. All vents and drains shall be provided with gate valve with blind flange assembly unless otherwise indicated in P&ID.
2. NDT of welds shall be as follows:

   Radiography : All butt welds 100%

   MPI : Socket welds 100%
3. Piping design as per ASME B 31.8, OISD 226 & PNGRB Guidelines
4. Charpy V notch test and hardness test shall be conducted for pipes, fittings and flanges at (-) 29°C.
5. Corrosion allowance of 1.5 mm has been considered for terminal piping.
6. All branch connections including vent, drain, pressure and temperature connection shall be as per branch connection table.
7. For valves, refer valve data sheets as enclosed.
8. Design Factor 0.5
9. 9. Ball Valve to be used in main pipeline shall have butt welded ends.

ITEM	SIZE	DESCRIPTION
Maintenance joints	ALL	Flanged, to be kept minimum
Pipe joints	1.5" & BELOW	SW coupling
	2.0" & ABOVE	Butt welded
Drains	ON LINES <= 1.5"	Refer std. drawing

© Copy Right VCS Quality Services Pvt. Ltd. All rights reserved
Digitally signed by RACHNA SHUKLA
Date: 2025.03.13 12:53:14 IST

	ON LINES >= 2.0"	As per P&ID or 0.75". Refer std. drawing
Vents	ON LINES <= 1.5"	Refer std. drawing
	ON LINES >= 2.0"	As per P&ID or 0.75". Refer std. drawing
Temp. Connection	1.5"	Flanged, installation as per std. drawing, except skin temperature measurement.
Press. Connection	0.75"	SW nipple with Plug/ Ball Valve to spec. as per Refer std drawing

© Copy Right VCS Quality Services Pvt. Ltd. All rights reserved
Digitally signed by RACHNA SHUKLA
Date: 2025.03.13 12:53:14 IST

Branch Table

																			BRANCH PIPE (INCH)
																	T	42	
																T	T	36	
															T	T	T	32	
														T	T	T	T	30	
													T	T	T	T	T	24	
												T	T	T	T	T	T	20	
											T	T	T	T	T	T	T	18	
										T	T	T	T	T	T	T	T	16	
									T	T	T	T	T	T	T	T	T	14	
								T	T	T	T	T	T	T	T	T	T	12	
							T	T	T	T	T	T	T	T	T	T	T	10	
						T	T	T	T	T	T	T	W	W	W	W	W	8	
					T	T	T	T	T	T	W	W	W	W	W	W	W	6	
				T	T	T	T	W	W	W	W	W	W	W	W	W	W	4	
			T	T	T	W	W	W	W	W	W	W	W	W	W	W	W	3	
		T	T	T	W	W	W	W	W	W	W	W	W	W	W	W	W	2	
	T	T	T	T	S	S	S	S	S	S	S	S	S	S	S	S	S	1.5	
T	T	T	T	S	S	S	S	S	S	S	S	S	S	S	S	S	S	1	
T	T	T	T	S	S	S	S	S	S	S	S	S	S	S	S	S	S	0.75	
T	T	T	T	S	S	S	S	S	S	S	S	S	S	S	S	S	S	0.50	
0.05	0.75	1	1.5	2	3	4	6	8	10	12	14	16	18	20	24	30	32	36	42		
PIPE RUN SIZE (INCH)																					

CODES	DESCRIPTION
T	Tees
W	Weldolet
S	Sockolet

© Copy Right VCS Quality Services Pvt. Ltd. All rights reserved
Digitally signed by RACHNA SHUKLA
Date: 2025.03.13 12:53:14 IST

Item	Lower Size (Inch)	Upper Size (Inch)	Sch./ Thk	Dmn. STD	Material	Description
PIPE GROUP						
PIPE	00.500	02.000	XS	B-36.10	ASTM A 106 GR.B	PE, SEAMLESS
PIPE	03.000	03.000	STD	B-36.10	ASTM A 106 GR.B	BE, SEAMLESS
PIPE	04.000	04.000	6.4 mm	B-36.10	ASTM A 106 GR.B (Charpy)	BE, SEAMLESS
PIPE	06.000	12.000	STD	B-36.10	ASTM A 106 GR.B (CHARPY)	BE, SEAMLESS
NIPPLE	00.500	01.500	M	B-36.10	ASTM A 106 GR.B	PBE, SEAMLESS
FLANGE GROUP						
FLNG.SW	00.500	01.500	M	B-16.5	ASTM A 105	300, RF/125AARH
FLNG.WN	02.000	12.000	M	B-16.5	ASTM A 105 (CHARPY)	300, RF/125AARH
FLNG.BLIND	00.500	01.500		B-16.5	ASTM A 105	300, RF/125AARH
FLNG.BLIND	02.000	12.000		B-16.5	ASTM A 105 (CHARPY)	300, RF/125AARH
FLNG.FIG.8	00.500	01.500		ASME- B 16.48	ASTM A 105	300, FF/125AARH

Item	Lower Size (Inch)	Upper Size (Inch)	Sch./ Thk	Dmn. STD	Material (Charpy)	Description
FLNG.FIG.8	02.000	08.000		ASME- B 16.48	ASTM A 105 (CHARPY)	300, FF/125AARH
SPCR&BLND	10.000	12.000		ASME- B 16.48	ASTM A 105 (CHARPY)	300, FF/125AARH
FITTING GROUP						
ELBOW.90	00.500	00.750		B-16.11	ASTM A 105	SW, 6000
ELBOW.90	01.000	01.500		B-16.11	ASTM A 105	SW, 3000
ELBOW.90	02.000	12.000	M	B-16.9	ASTM A 234 GR.WPB (CHARPY)	BW, 1.5D
ELBOW.45	00.500	00.750		B-16.11	ASTM A 105	SW, 6000
ELBOW.45	01.000	01.500		B-16.11	ASTM A 105	SW, 3000

© Copy Right VCS Quality Services Pvt. Ltd. All rights reserved

Digitally signed by RACHNA SHUKLA
Date: 2025.03.13 12:53:14 IST

ELBOW.45	02.000	12.000	M	B-16.9	ASTM A 234 GR.WPB (CHARPY)	BW, 1.5D
T.EQUAL	00.500	00.750		B-16.11	ASTM A 105	SW, 6000
T.EQUAL	01.000	01.500		B-16.11	ASTM A 105	SW, 3000
T.EQUAL	02.000	12.000	M	B-16.9	ASTM A 234 GR.WPB (CHARPY)	BW
T.RED	00.500	00.750		B-16.11	ASTM A 105	SW, 6000
T.RED	01.000	01.500		B-16.11	ASTM A 105	SW, 3000
T.RED	02.000	12.000	M, M	B-16.9	ASTM A 234 GR.WPB (CHARPY)	BW
REDUC. CONC	02.000	12.000	M, M	B-16.9	ASTM A 234 GR.WPB (CHARPY)	BW
REDUC. ECC	02.000	12.000	M, M	B-16.9	ASTM A 234 GR.WPB (CHARPY)	BW
SWAGE. CONC	00.500	03.000	M, M	BS-3799	ASTM A 105 (CHARPY)	PBE
SWAGE. ECC	00.500	03.000	M, M	BS-3799	ASTM A 105 (CHARPY)	PBE
CAP	00.500	00.750		B-16.11	ASTM A 105	SCRF, 6000
CAP	01.000	01.500		B-16.11	ASTM A 105	SCRF, 3000
CAP	02.000	12.000	M	B-16.9	ASTM A 234 GR.WPB (CHARPY)	BW
PLUG	00.500	00.750		B-16.11	ASTM A 105	SCRM, 6000
PLUG	01.000	01.500		B-16.11	STM A 105	SCRM, 3000
CPLNG.FULL	00.500	00.750		B-16.11	ASTM A 105	SW, 6000
CPLNG.FULL	01.000	01.500		B-16.11	ASTM A 105	SW, 3000
CPLNG.HALF	00.500	0.750		B-16.11	ASTM A 105	SW, 6000
CPLNG.HALF	01.000	01.500		B-16.11	ASTM A 105	SW, 3000
CPLNG.LH	00.500	00.750		B-16.11	ASTM A 105	SW, 6000
CPLNG.LH	01.000	01.500		B-16.11	ASTM A 105	SW, 3000
CPLNG.RED	00.500	00.750		B-16.11	ASTM A 105	SW, 6000

© Copy Right VCS Quality Services Pvt. Ltd. All rights reserved
Digitally signed by RACHNA SHUKLA
Date: 2025.03.13 12:53:14 IST

CPLNG.RED	01.000	01.500		B-16.11	ASTM A 105	SW, 3000
O'let						
SOCKOLET	00.500	00.750		MSS-SP97	ASTM A 105	SW, 6000
SOCKOLET	01.000	01.500		MSS-SP97	ASTM A 105	SW, 3000
WELDOLET	02.000	08.000	M, XX	MSS-SP97	ASTM A 105 (CHARPY)	BW
VALVE GROUP						
VLV.GATE	00.500	01.500		API-602	BODY-ASTM A 105,TRIM-STELLITED,STEM 13%	SW, 800, 3000, B-16.11
VLV.GATE	02.000	12.000		API 600/ ISO 10434	BODY-ASTM A 105/ ASTM A 216 GR.WCB STELLITED, STEM- SS304	FLGD, 300, B-16.5, RF/125AARH
VLV.GLOBE	00.500	01.500		BS EN 1SO 15761	BODY-ASTM A 105,TRIM-STELLITED,STEM- 13%	SW, 800, 3000, B-16.11
VLV.GLOBE	02.000	12.000		BS 1873	BODY-ASTM A 105 / ASTM A 216 GR.WCB , TRIM-13% CR.STEEL	FLGD, 300, B-16.5, RF/125AARH
VLV.CHECK	00.500	01.500		BS EN 1SO 15761	BODY-ASTM A 105, TRIM- STELLITED	SW, 800, 3000, B-16.11
VLV.CHECK	02.000	12.000		API-6D/BS-1868	BODY-ASTM A 105 / ASTM A 216 GR.WCB	FLGD, 300, B-16.5, RF/125AARH
VLV.BALL	00.500	01.500		BS EN 1SO 17292	BODY-ASTM A 105,	SW, 800, B-16.5, RF/125AARH
VLV.BALL	02.000	12.000		API-6D	BODY-ASTM A 216 GR.WCB/ ASTM 105	FLGD, 300, B-16.5, RF/125AARH
VLV.BALL	02.000	12.000	M	API-6D	BODY-ASTM A 216 GR.WCB/ASTM 105,	BW, 300, B-16.25

© Copy Right VCS Quality Services Pvt. Ltd. All rights reserved
Digitally signed by RACHNA SHUKLA
Date: 2025.03.13 12:53:14 IST

VLV.PLUG	00.500	01.500		BS-5353	BODY-ASTM A 105,PLUG-A105 +0.003" ENP	SW, 800#, 3000, B-16.11
VLV.PLUG	02.000	12.000		API-6D	BODY- A 216GR. WCB, PLUG: A216 GR.WCB + 0.003" ENP	FLGD, 300, B-16.5, RF/125AARH
VLV.PLUG	02.000	12.000	M	API-6D	BODY-ASTM A 216 GR.WCB, PLUG: A216 GR.WCB + 0.003"ENP	BW, 300, B-16.25
BOLT GROUP						
BOLT.STUD	00.500	12.000		B-18.2	BOLT:A193 GR.B7, NUT:A194 GR.2H	
GASKET						
GASKET	00.500	12.000		B-16.20-ANSI B16.5	SP.WND METTALIC WITH GRAPHITEFILLER	SPIRAL, 300

Note: For Valve Material, valve data sheet shall also be referred, stringent requirement among data sheet and above details shall be followed.

© Copy Right VCS Quality Services Pvt. Ltd. All rights reserved
Digitally signed by RACHNA SHUKLA
Date: 2025.03.13 12:53:14 IST

STANDARD SPECIFICATIONS

Digitally signed by RACHNA SHUKLA
Date: 2025.03.13 12:53:14 IST

VCS QUALITY SERVICES PVT. LTD.

STANDARD SPECIFICATION

FOR
PIPELINE CONSTRUCTION (ONSHORE)

VCS – SS – PP - 2001

Rev. No	Date	Prepared By	Checked By	Approved By	Authorized By
03	29.04.2022	RP	MC	HK	GW
02	03.01.2022	SR	MC	HK	HK

UNCONTROLLED COPY	:	If printed
CONTROLLED COPY	:	If in soft and signed

Copyright VCS Quality Services Private Limited – All rights reserved

Digitally signed by RACHNA SHUKLA
Date: 2025.03.13 12:53:14 IST

REVISION RECORD

Rev.	Revision Date	Prepared by	Checked by	Approved by	Authorized by	Revision Description
00	28.01.2020					Issued as Standard Specification (Document formatting, Cover Page, Doc numbering updated from SS-PL-015 to VPC-SS-PL-0015 keeping Revision Number Same)
		MB	MC	AD	SK	
01	28.01.2020					Document numbering updated from VPC-SS-PL-0015 to VPC-SS-PP-2001
		MB	MC	AD	SK	
02	03.01.2022					Revised as marked
		SR	MC	HK	HK	
03	29.04.2022					VCS QMS Integration
		RP	MC	HK	GW	

Copyright VCS Quality Services Private Limited – All rights reserved

Digitally signed by RACHNA SHUKLA
Date: 2025.03.13 12:53:14 IST

ABBREVIATIONS:

ASME	American Society of Mechanical Engineers
ASTM	American Society of Testing and Materials
API	American Petroleum Institute
BS	British Standards
ISO	International Organization for Standardization
MSS-SP	Manufacturers Standardization Society - Standard Practice
NACE	National Association of Corrosion Engineers
OISD	Oil Industry Safety Directorate
SSPC	Steel Structures Painting Council

Copyright VCS Quality Services Private Limited – All rights reserved

Digitally signed by RACHNA SHUKLA
Date: 2025.03.13 12:53:14 IST

CONTENTS

1.0 SCOPE 4

2.0 REFERENCE CODE & STANDARDS 5

3.0 GENERAL Requirement 6

4.0 ROUTE SURVEY & MARKING 7

5.0 RIGHT–OF–USE (ROU) 8

6.0 CLEARING, GRADING AND BACKFILLING OF ROU 10

7.0 HANDLING, HAULING, AND STRINGING OF STRINGING OF LINE PIPES AND STORAGE OF OTHER MATERIAL 12

8.0 TRENCHING 17

9.0 BLASTING 22

10.0 PIPE BEND/ BENDING 23

11.0 LINEING UP AND WELDING 25

12.0 LOWERING-IN 27

13.0 BACKFILLING 29

14.0 TIE-IN 32

15.0 SPECIAL INSTALLATIONS ON THE PIPELINE 32

16.0 THIRD PARTY FACILITIES 36

17.0 MARKER 38

18.0 FINAL CLEAN-UP OF THE CONSTRUCTION RIGHT-OF-USE (ROU) 38

19.0 MAINTENANCE DURING DEFECTS LIABILITY PERIOD 41

Copyright VCS Quality Services Private Limited – All rights reserved

Digitally signed by RACHNA SHUKLA
Date: 2025.03.13 12:53:14 IST

1. SCOPE

1.1 This specification covers the minimum requirements for the various activities to be carried out by Contractor for or about the construction of cross-country onshore pipelines and associated facilities.

1.2 This specification shall be read in conjunction with scope of work and requirements indicated in specifications and documents included in the contract between Company and Contractor.

1.3 Contractor shall take full responsibility for the stability, suitability and safety of all operations and methods involved in the work.

1.4 The Contractor shall be deemed to have visited, inspected and examined the work area(s) and its surroundings and to have satisfied himself with the form and nature thereof, including sub-surface conditions, hydrological and climatic conditions, accessibility to the work area(s), the extent and nature of the work and materials and equipment necessary for the completion of the work.

1.5 The Contractor shall be deemed to have obtained all necessary information and provided for all risks, contingencies and all other circumstances, which may influence the work.

1.6 Contractor, as part of his Scope of work, shall investigate and establish any new development which may have taken place since the topographical survey was carried out by the Company during feasibility stage and shall submit detailed documentation to support any proposed realignment of the surveyed pipeline route resulting from the actual conditions encountered during his investigations or as required by the relevant Local Authorities. Any realignment of the surveyed pipeline route shall be subject to Company approval prior to implementation.

1.7 Requirements related to pipeline construction including, but not limited to, clearing and grading of Right-of-Use (ROU), staking of the pipeline route, handling, hauling, stringing of pipes along ROU, storing of all materials, trenching, cold field bending of pipes, line-up, welding, lowering, backfilling, tie-in, installation of associated facilities and pipeline appurtenances, testing, clean-up and restoration, maintenance during defect liability period, etc. are addressed in this specification.

2. REFERENCE CODE & STANDARDS

Reference code and Standards latest version has been followed for specification, in case of conflict between the requirement of this standard specification and the reference codes and regulations mentioned below, the more stringent requirement shall apply unless otherwise agreed by Company.

AMERICAN SOCIETY OF MECHANICAL ENGINEERS (ASME)

B 31.4	:	Pipeline Transportation System for Liquid Hydrocarbons and Other Liquids.
B 31.8	:	Gas Transmission and Distribution Piping Systems.
B 16.5	:	Pipe Flanges and Flanged Fittings.

Copyright VCS Quality Services Private Limited – All rights reserved

Digitally signed by RACHNA SHUKLA
Date: 2025.03.13 12:53:14 IST

B 16.9 : Factory made Wrought Butt Welding Fittings.

B 31.3 : Process Piping.

AMERICAN PETROLEUM INSTITUTE (API)

5L 1 : Recommended practice for rail road transportation of line pipe.

1104 : Welding of Pipeline and related Facilities.

1105 : Bulletin on construction Practices for oil and related facilities.

1109 : Marking Liquid Petroleum Pipeline facilities.

1110 : Recommended Practice for Pressure Testing of Petroleum Pipeline.

1102 : Steel Pipelines Crossing Railroads and High way.

BRITISH STANDARDS (BS)

8010 Part 2 : Pipeline on Land Design, Construction and Installation.

PNGRB REGULATIONS:

G.S.R 808(E) T4S: Regulations for Natural Gas Pipelines

G.S.R. Infra/ T4S/ P&PPL : Regulations for Petroleum and Petroleum products pipelines

G.S.R. 612(E) T4S: Regulations for CGD Network

INTERNATIONAL ORGANIZATION FOR STANDARDIZATION (ISO)

Part 192 : Transportation of natural gas by Pipeline (US Department of Title 49 transportation–Pipeline Safety standards).

Part 195 : Transportation of liquid by Pipeline (US Department of Transportation–Pipeline safety standards).

3. GENERAL REQUIREMENT

3.1. Contractor shall, with due care and diligence, execute the work in compliance with all laws, by laws, ordinances, regulations etc. of the land and provide all services and labor, inclusive of supervision thereof, supply of all materials, excluding the materials indicated as "Company Supplied Materials" in the contract, equipment, appliances or other things of whatsoever nature required for the execution of the work, whether of a temporary or permanent in nature.

3.2. In case, the Company will get the surveys and soil investigations carried out along pipeline route, the details of the surveys, soil investigations and other data collected by the Company shall be presented in the drawings and documents enclosed with the Contract for

Copyright VCS Quality Services Private Limited – All rights reserved

Digitally signed by RACHNA SHUKLA
Date: 2025.03.13 12:53:14 IST

the information of the Contractor. The Contractor shall be deemed to have reviewed and satisfied himself with regard to the details provided in the Contract. Contractor shall not be entitled for any compensation in terms of time or cost in case of any variation in actual site conditions from the data furnished in the Contract.

3.3. Where in the Contractor's opinion the survey and investigation data are not found to be sufficient in detail, it shall be the responsibility of the Contractor to assess, requirement of any additional surveys and/ or soil investigations or any other data collection that may be deemed necessary for proper execution of the works. The Contractor shall be responsible for carrying out all such surveys and collect additional data/ information at no extra cost to Company.

3.4. Details of the permissions/ clearances obtained by the Company from agencies/ authorities having jurisdiction in the area where the work is to be performed are indicated in the documents enclosed with the Contract for the information of the Contractor. It shall be the responsibility of the Contractor to comply with all the conditions and requirements issued by the agencies/ authorities. In case any other permit/ authorization is required to be obtained from the relevant authorities for performance of the work, the same shall be obtained by the Contractor.

3.5. Compliance with the requirements of this specification or the Company's approval of any aspect of any operations covered by this specification shall in no way relieve the Contractor of his ultimate responsibility for the satisfactory completion of the work authorized under this Contract.

3.6. The Contractor shall provide full access to the Company Representative for monitoring of all work areas during all phases of work.

3.7. The Contractor shall provide and maintain all lights, guards, fencing, watchmen, etc., when and where necessary or required by Company or by any duly constituted authority and/ or by the authorities having jurisdiction thereof for the protection of the work and properties or for the safety and the convenience of public and/ or others.

3.8. The Contractor shall take full responsibility for the suitability and safety of all operations and methods involved in the work.

For the purpose of this specification the following definitions apply:

- Words 'Shall' and 'Must' where used indicate that a provision is mandatory.
- Words 'Should' and 'Will' where used indicate that a provision is not mandatory but is recommended as good practice.
- 'May' used as a verb to indicate that a provision.

3.9. WORKING SPREAD LIMITATIONS

Contractor shall, in general, observe the following maximum distances between the working mainline spread:

Between ROU grading, clearing and backfilling	:	25 Kms
Between backfilling and final clean-up	:	10 Kms

Copyright VCS Quality Services Private Limited – All rights reserved

Digitally signed by RACHNA SHUKLA
Date: 2025.03.13 12:53:14 IST

4. ROUTE SURVEY & MARKING

4.1 Having been granted the accessibility of the route the contractor shall inspect and analysis the entire pipeline route within the designated corridor including Major crossing, Terminal/ Despatch Station and Terminal/ Receipt Station and if any spur lines to other pipeline/ station before commencement of construction.

4.2 These inspection reports shall state the condition of the item potentially affected by construction and record the mutual approval of all parties concerned

4.3 Contractor shall establish reference points in every 500 meters along the pipeline route. The reference points shall be positioned at 25 meters offset from pipeline centerline.

4.4 The contractor shall stake markers in the centerline of the pipeline in 100 m intervals. In areas where it is difficult to follow the centerline when staked at 100 m intervals, the stakes shall be set at 50 m intervals or less to ensure unobstructed visibility.

5. RIGHT–OF–USE (ROU)

Company shall make available the ROU acquired for the works covered in the Contract to the Contractor. The Contractor shall carry out the construction activities within the ROU acquired by Company. In case any additional land is required for carrying out the works, it shall be the responsibility of the Contractor to make arrangement for all such additional land at no extra cost to Company.

5.1 STAKINGS

Company has surveyed and marked the centreline of the pipeline route with stone pillars at every 250 meters and also provided pillars at all turning points. In addition, Company also has established survey bench marks along the route. However, it is possible that some of the pillars may have been removed or shifted since their installation. The Contractor shall locate and/ or re-establish benchmarks, turning points and intermediate points by field survey prior to commencement of grading and clearing.

The Contractor shall stake markers in the centreline of the pipeline at a distance of maximum 100 m for straight line sections and maximum 10 m for horizontal bends.

The width of the pipeline ROU acquired by Company and the location of the pipeline centreline within the ROU is shown on the Alignment Sheets. The Contractor shall stake ROU boundary line, so as to prepare the strip for laying the pipeline. Two ROU markers shall be staked at every 100 m, one on either side of the surveyed centerline, for this purpose by the Contractor.

In addition, the Contractor shall also install distinct markers for special points such as obstacle crossing, change of wall thickness along with chainage and contract limits.

Chainage markers shall be installed at every 250 meters.

Any deviation from the approved alignment shall be executed by Contractor after seeking Company approval in writing prior to clearing operations.

5.2 PUBLIC CONVENIENCE AND SAFETY

The Contractor shall give due consideration to the interests of property owners and tenants wherever involved, adhere to all ROU restrictions and permits, and exert all reasonable efforts

Copyright VCS Quality Services Private Limited – All rights reserved

Digitally signed by RACHNA SHUKLA
Date: 2025.03.13 12:53:14 IST

to maintain the goodwill of the tenants and Land Owners for the benefit of the Company.

The Contractor shall provide temporary approaches to and from crossings of public roads, private roads and entrances that may be opened for construction, and maintain them in a safe condition.

Warning signs shall be erected on both sides of highway/ road crossing. The signs shall state that the pipeline ROU is a private work area and that unauthorized entry is prohibited.

5.3 FENCING

5.3.1 Prior to clearing and grading of the Right-of-Use or stringing of pipe, Contractor shall open fences on or crossing the construction Right-of-Use and install temporary gate. Before such fences are cut and opened, Contractor shall notify the land owner or tenant, and where practicable, the opening of the fences shall be in accordance with the wishes of said owner and tenant. In all cases where Contractor removes fences to obtain work room, Contractor shall provide and install temporary fencing, and on completion of construction shall restore such fencing to its original condition.

5.3.2 Contractor shall install temporary fencing on either side of ROU where in Company's opinion, it is considered essential to ensure safety and non-interference, especially in areas like grazing lands, villages etc.

5.3.3 Fencing shall be removable type wherever necessary, to permit crossing of traffic. The type of fencing must be suitable for the situation in accordance with user. The pole distance shall not be greater than 6m. The minimum height of the fencing shall be 1.2 m above grade. Fencing can consist of one or more rows of smooth wire and/ or of barbed wire.

5.3.4 Fencing shall be continuously maintained and the thorough-ways inspected to be shut during the execution of the work.

5.4 CARE OF SERVICES AND PROPERTY

5.4.1 When ingress and egress of equipment interferes with existing services, the necessary arrangements shall be made to preserve the continuous use of the existing services during construction of the pipeline.

5.4.2 Temporary culverts shall be installed in all drainage ditches, creeks, and other drainage courses where blockage might result in damage to property. All temporary culverts shall be removed when no longer required. Continuity of water supplies for both domestic and agricultural purposes shall be maintained.

5.4.3 In the event of damage to a facility, the Owner of the facility concerned shall be immediately informed and the facility repaired as necessary (where permitted by the Owner) to allow for its proper function until such time as permanent repairs can be made.

5.5 RESTRICTED WIDTH OF ROU

In certain areas restricted width of ROU shall be available and it shall be Contractor's responsibility to arrange its equipment etc. in such a manner as not to cause any hindrance to the movement of manpower or machinery and at the same time not to cause any damage to other's property.

Copyright VCS Quality Services Private Limited – All rights reserved

Digitally signed by RACHNA SHUKLA
Date: 2025.03.13 12:53:14 IST

5.6 ACTIVITIES IN FLOODED FIELDS

Where the pipeline is constructed across agricultural land where regular flooding is necessary, such as rice paddocks. Contractor shall ensure that the water supply and access to land on either side of the ROU is maintained, and that the landowner's farming activities are not restrained in any way.

5.7 DUST CONTROL

Adequate dust control measures shall be adopted, including water sprinkling, to ensure that dust does not affect the work or the health and safety of personnel working and travelling on the ROU, adjacent landowners or tenants, animals, crops or pastures.

6. CLEARING, GRADING AND BACKFILLING OF ROU

6.1.1 ROU shall be cleared of all trees, bush, hedges or other obstacles lying within the width of ROU that may hinder the construction of pipeline.

6.1.2 Before clearing operations are started, the Contractor shall familiarize itself with all special provisions included in the ROU secured by the Company and the Contractor shall comply with these provisions.

6.1.3 Wherever the pipeline ROU runs across, through or alongside farm yards, built-up areas, groves, plantations, forests, horticultural spreads, gardens, plantations or grass-fields, ditches, dikes, roads, paths, railways or any other area with restrictions, the Contractor shall grade only the width of the ROU necessary for digging the pipeline trench and constructing. The Contractor shall carry out the work in such a way that damage resulting from the pipeline construction is kept to a minimum.

6.1.4 Permission for felling of "Scheduled Trees" as per applicable tree felling Acts shall be obtained by the Contractor prior to felling of the trees.

6.1.5 All stumps shall be grubbed on a continuous strip, with a width equal to trench top width plus two meters on either side centered on the pipeline centreline. In addition, all stumps shall be grubbed from areas of the construction. Outside of these areas to be graded, the stumps may either be grubbed or cut off to ground level. Any stump cut off must be left in a condition suitable for rubber-tyred pipeline equipment movement. Whenever stumps are grubbed and a hole is left in the ground, the Contractor shall back-fill the hole-and compact it to prevent water from gathering in it and making a big hole.

6.1.6 The ROU shall be graded to establish the working platform as required for efficient pipeline construction. The Contractor shall grade the pipeline ROU as required for installation of the pipeline and for providing access to the pipeline during construction.

6.1.7 The Contractor shall grade sharp points or low points to allow the pipe to be bent and laid within the limits set forth in this specifications and alignment sheets with regards to the minimum elastic curvature permitted. All grading shall be done as is necessary to minimize the necessity of sag and over bends.

6.1.8 Temporary or permanent deposit of any kind of material resulting from clearing and grading shall not be permitted in the approach to roads, railways, streams, ditches, drainage ditches and any other position which may hinder the passage and/ or the natural water drainage.

Copyright VCS Quality Services Private Limited – All rights reserved

Digitally signed by RACHNA SHUKLA
Date: 2025.03.13 12:53:14 IST

6.1.9 The ROU clearing and grading operations, however, shall in no case involve embankment/ structures of any type without prior approval of the authorities having jurisdiction over the same.

6.1.10 In the case of natural or artificial deposits of loose soil, sand, heaps of earth or other fill materials, these shall be removed till stable natural ground level is reached so as to ensure the construction of the pipeline ditch in stable ground.

6.1.11 No filling of the ground over the pipeline centreline to achieve the minimum depth of cover shall be permitted. In locations where the ground is filled for access or other reason, the natural surface profile shall be surveyed to ensure that compliance with the minimum cover requirements can be demonstrated.

6.1.12 Grading of the ROU shall be kept to a minimum in order to preserve as much of rootstock as possible.

6.1.13 Cleared materials shall be stockpiled and preserved for use during restoration and final clean up. In no case shall it be left to interfere with the grading and laying operations.

6.1.14 Entire clearing and grading operations shall comply with Environment Management Plan.

6.2 GRADING IN STEEP AND ROCKY AREAS

6.2.1 In the case of ROU clearing and grading on the hillside or in steep slope areas, barriers or other arrangements shall be provided to prevent the removed materials from rolling downhill. Slope of side hill faces shall be stabilized to prevent landslides.

6.2.2 Grading operations in rocky terrain should normally be carried out by drilling, wedging, mechanical excavators or manually. In certain areas where solid rock cannot be removed until loosened by blasting, in order to make an adequate working space along the pipeline, blasting may have to be resorted to. Contractor shall identify such areas and take prior approval of concerned authorities before resorting to any blasting operations.

6.3 PROVISION OF DETOURS

6.3.1 Contractor shall do all necessary grading and bridging at road, water and other crossings and at other locations where needed, to permit the passage of its men and equipment. It is understood that the Contractor has recognized such restrictive features of the Right-of-Use and shall provide the necessary detours and execute the works without any extra cost to Company. Public travel shall not be inconvenienced nor shall it be wholly obstructed at any point.

6.3.2 In rough or steep terrain, Contractor may have to grade access roads and temporary bypass roads for its own use. Where such access roads do not fall on the Right-of-Use; Contractor shall obtain necessary written permission from land owners and tenants and be responsible for all damages caused by the construction and use of such roads, and at no extra cost to Company.

6.3.3 Contractor at his own cost shall furnish and maintain watchman detours, lanterns, traffic lights, barricades, signs, wherever necessary to fully protect the public.

6.3.4 Contractor shall be responsible for moving its equipment and men across or around watercourses. This may require the construction of temporary bridges or culverts.

Copyright VCS Quality Services Private Limited – All rights reserved

Digitally signed by RACHNA SHUKLA
Date: 2025.03.13 12:53:14 IST

Temporary bridging required for Right-of-Use crossing water courses shall be constructed in consultation with concerned Authorities. Contractor shall ensure that such temporary works shall not interfere with normal water flow, avoid overflows, keep the existing morphology unchanged and shall not unduly damage the banks of water courses. No public ditches or drains shall be filled or bridged for passage of equipment until Contractor has secured written approval of the Authorities having jurisdiction over the same. Contractor shall furnish Company a copy of such approval.

6.4 OFF RIGHT-OF-USE DAMAGES

Contractor shall confine all its operations within limits of the Right-of-Use. Any-damage to property outside ROU shall be restored or settled to the Contractor's account.

Contractor shall promptly settle all off Right-of-Use damage claims. Should Contractor fail to do so, Company shall give written notice to Contractor that if Contractor does not settle such claims within seven days after such notice, Company shall have the authority to settle claims from the account of Contractor.

6.5 DISPOSAL OF DEBRIS

All grubbed stumps, timber, bush, undergrowth and roots cut or removed from the ROU, blasted rocks and boulders shall be disposed of in a manner and method satisfactory to Company, Land Owner and/ or tenant, and Government Authorities having jurisdiction and as soon as practical after the initial removal.

6.6 CONSERVATION OF TOP SOIL

6.6.1 In cultivable lands and other areas specifically designated by the Company representative, top 300mm of the arable soil, excavated shall, be stockpiled separately; for; replacing in original position. Removed topsoil shall be stockpiled in a location that will minimize any loss due to erosion or mixing with other material.

6.6.2 Any topsoil lost due to erosion or mixing with other material shall be replaced with imported topsoil that is compatible with the area subject to approval by Company representative.

7. HANDLING, HAULING, AND STRINGING OF LINE PIPES AND STORAGE OF OTHER MATERIAL

7.1 GENERAL

The Contractor shall exercise utmost care in handling line pipe and other materials. Contractor shall be fully responsible for all materials and their identification until such time that the pipes and other materials are installed in permanent installation. Contractor shall be fully responsible for arranging and paying for temporary storage areas for the pipeline materials, however, method of storage shall be approved by Company.

Contractor shall reimburse the Company for the cost of replacement of all Company supplied materials damaged during the period in which such materials are in the custody of the Contractor. It shall be Contractor's responsibility to unpack any packings for the materials supplied by Company.

Pipe bevel protectors shall always be kept in position during all handling, transportation and stringing operations and shall be removed only prior to fit-up for welding. After

Copyright VCS Quality Services Private Limited – All rights reserved

Digitally signed by RACHNA SHUKLA
Date: 2025.03.13 12:53:14 IST

fabrication and welding, the Contractor shall arrange to return all such bevel protectors at Company's designated storage yard and as instructed by Company.

7.2 "TAKING-OVER" OF LINE PIPES

In case Company supplies line pipes to the Contractor as 'Free Issue Material', the Contractor shall receive and 'take over' against requisition, line pipes from the Company's designated place(s) of delivery as defined in the Contract. The Contractor shall, in the presence of Company Representative, visually inspect the entire surface of the bare pipes and coating of the coated pipes at the time of taking delivery and record all damages and exact length of pipes received.

In the case of coated pipes, the Contractor at his option may carry out holiday detection at a prescribed set voltage and record any holidays detected at the time of 'taking over', in the presence of Company Representative. However, if the Contractor proposes to perform only visual inspection, then repair of all holidays found at the time of laying the pipeline shall be carried out by the Contractor at no extra cost to Company as per relevant Specification.

The Contractor at his option may also carry out gauging of the pipes and record any dents detected at the time of 'taking over', in the presence of Company Representative. However, if the Contractor proposes to perform only visual inspection, then repair of all dents found at the time of laying the pipeline shall be carried out by the Contractor at no extra cost to Company. Repair of all damage occurring after taking over delivery of material shall be contractor's cost.

7.3 HANDLING OF LINE PIPES

7.3.1. BARE PIPES

Contractor shall unload, load, stockpile and transport the bare pipes using suitable means and, in a manner, to avoid denting, flattening, or other damages to pipes. Pipe shall not be allowed to drop or strike objects, which will damage the pipe but shall be lifted or lowered from one level to another by suitable equipment. Lifting hooks when used shall be equipped with a plate curved to fit the curvature of the pipe. In loading pipe on trucks each length shall be lowered to position without dropping and each succeeding length shall rest on special supports on the truck and shall be separated from the adjacent pipes. After loading, suitable chains and padding shall be used to tie the load securely to each bolster. Pipe, when stock piled, shall be placed on suitable skid to keep it clear of the ground and flood water. Care shall be exercised in handling or stock-piling pipes in order to avoid distortion, flattening, denting or other damages. The Contractor shall provide all necessary timber or other materials required for the stock-piling. While stacking, the number of allowable layers of bare pipes shall be calculated as per API RP 5L1 and shall be agreed with Company. The stacks must be properly secured against sliding and shall consist of pipes of the same diameter and wall thickness. Adjacent stacks of pipes having different dimensional characteristics shall be clearly separated.

Pipes which are damaged at the time of delivery or `taking-over' (when line pipe is supplied by Company), particularly those which are dented, buckled, or otherwise permanently deformed, must be stacked separately and may be transported to the sites only when these defects have been repaired or eliminated.

7.3.2. CORROSION COATED PIPES

Copyright VCS Quality Services Private Limited – All rights reserved

Digitally signed by RACHNA SHUKLA
Date: 2025.03.13 12:53:14 IST

The Contractor shall load, unload, transport and stockpile the coated pipes using approved suitable means and, in a manner, to avoid damage to the pipe and coating. Contractor shall submit to Company a complete procedure indicating the manner and arrangement used for handling and stacking of coated pipes for Company approval prior to commencement of handling operations.

Use of vacuum lifting equipment's is preferred. Hooks may also be used for handling the pipes provided they have sufficient width and depth to fit the inside of the pipe and covered with soft material like rubber, Teflon or equivalent, so as not to cause damages to bevel or pipe ends. During hoisting cables/ wire ropes shall have sufficient inclination compared to pipe axis so that they do not come into contact with external coating.

Coated pipes may be handled by means of slings and belts of proper width (minimum 60 mm) made of non-metallic/ non-abrasive materials. In this case, pipes to be stacked shall be separated row by row to avoid damages by rubbing the coated surface in the process of taking off the slings. Use of round sectional slings is prohibited.

During handling, suitable handling equipment's with proper length of booms shall be used. Forklifts may be used provided that the arms of the forklifts are covered by suitable pads preferably rubber. Before lifting operations, it is essential to ensure that the pipe surface is free from foreign materials with sharp edges. Belts/ slings when used shall be cleaned to remove hard materials such as stone, gravel etc. Coated pipes shall not be bumped against any other pipe or any other objects. Rolling, skidding or dragging shall be strictly forbidden.

Coated pipes at all times shall be stacked completely clear from the ground so that the bottom row of pipes remains free from any surface water. The pipes shall be stacked at a slope so that during rain water does not collect inside the pipe.

The coated pipes may be stacked by placing them on ridges of sand free from stones and covered with a plastic film or on wooden supports provided with suitable cover. This cover can, for example, consist of dry, germ free straw with a plastic film, otherwise foam rubber may be used. The supports shall be spaced in such a manner as to avoid permanent bending of the pipes, particularly in case of small diameter pipes with low wall thickness. The pipes shall be stacked so that the uncoated beveled ends are in line at one end, thus making differences in lengths clearly noticeable.

Stacks shall consist of limited number of layers so that the pressure exercised by the pipes own weight does not cause damages to the coating. Each pipe section shall be separated by means of spacers suitably spaced for this purpose. Stacks shall be suitably secured against falling down and shall consist of pipe sections having the same diameter and wall thickness. The weld bead of pipes shall be positioned in such a manner so as not to touch the adjacent pipes.

Coated Pipes stacked in open storage yards/ dump yards shall be suitably covered on top to decrease direct exposure to sunlight. The ends of the pipes during handling and stacking shall always be protected with bevel protectors.

The trailers/ rail wagons shall be equipped with adequate pipe supports having as many round hollow beds as the number of pipes to be placed on the bottom of the trailer bed. Supports shall be provided for at least 10% of the pipe length. These supports shall be lined with a rubber protection and shall be spaced in a manner as to support equal load from the pipes. The rubber protection shall be free from all nails and staples where pipes are in contact. The

Copyright VCS Quality Services Private Limited – All rights reserved

Digitally signed by RACHNA SHUKLA
Date: 2025.03.13 12:53:14 IST

second layer and all subsequent layers shall be separated from each other with adequate number of separating layers of protective material such as straw in plastic covers or mineral wool strips or equivalent, to avoid direct touch between the coated pipes.

All stanchions of trailers/ rail wagons used for transportation shall be covered by non-abrasive material like rubber belts or equivalent. Care shall be exercised to properly cover the top of the stanchions and convex portions such as reinforcement of the truck/ rail wagon body, rivets etc. to prevent damage to the coated surface.

7.4 TEMPORARY STOCKPILES

The Contractor at his own cost shall arrange for the land required for temporary stockpile of pipes, whenever the pipes are to be stockpiled prior to stringing. Pipes shall be stacked minimum 300 mm clear off the ground so that the bottom of pipes remain free from any surface water. The pipes shall be stacked at a slope so that rain water does not collect inside the pipe.

The coated pipes may be stacked by placing them on ridges of sand free from stones and covered with a plastic film or on wooden supports provided with suitable cover. This cover can, for example, consist of dry, germ free straw covered with a sheet of plastic sheet or foam rubber. The supports spacing shall be such that prevents permanent bending of the pipes.

Stacks shall consist of limited number of layers so that the pressure exercised by the pipes own weight does not cause damages to the pipe as well as coating. Each pipe section shall be separated. The Contractor shall submit calculations for the number of tiers of pipes during stacking for approval by Company Representative. API RP 5L1 may be used as guidelines.

By means of spacers suitably spaced for the purpose, stacks shall be suitably secured against falling down and shall consist of pipe sections having the same diameter and wall thickness. Where applicable, the weld bead of pipes shall be positioned in such a manner so as not to touch the adjacent pipes.

The pipes shall be stacked in such a manner that the uncoated beveled ends are in line at one end, thus making differences in lengths clearly noticeable at the other end.

At such time as the temporary stockpile site is no longer needed, the site shall be cleaned up and the property restored to the satisfaction of the landowner and the clean-up as per of this Specification. The Contractor shall obtain letter from Land Owners clearly stating that the land has been returned and handed over to the Land Owners to their entire satisfaction.

7.5 STRINGING OF LINE PIPE ALONG ROU

7.5.1 Pipes shall be unloaded from the stringing trucks and lowered to the ground by means of side boom, Hydra Crane or swinging crane or other suitable equipment using lifting devices as per this specification. Pipe shall not be rolled, dragged or dropped from the stringing truck.

7.5.2 Stringing of pipe shall be carried out only in day light and after clearing and grading operations have been completed. Pipe shall not be strung on the ROU in rocky areas, where blasting may be required, until all blasting is complete and the area cleared of all debris. If pipe has already been strung in an area where blasting is subsequently found to be required, all previously strung pipe shall be removed to a safe area at Contractor's cost and time and protected from damage.

Copyright VCS Quality Services Private Limited – All rights reserved

Digitally signed by RACHNA SHUKLA
Date: 2025.03.13 12:53:14 IST

7.5.3 The stringing of the pipe on the ROU shall be done in such a manner as to cause the least interference with the normal use of the land crossed and to avoid damage to or interference with the pipes. The sequence of pipes must be interrupted at suitable intervals, spaced to coincide with passages, roads, railroads, water-bodies and at other places if requested by Land Owner or tenants to permit use of the land. Care shall be taken to provide safe working space between trench edge and the pipe.

7.5.4 Strung pipe shall be supported clear off the ground (minimum 300 mm) and in a manner that will not damage the pipe or coating. Pipe shall be strung on approved soft earth / sand filling bags & wedge.

7.5.5 Special precautions are to be taken and extreme care exercised where stringing operations are carried out in the vicinity of overhead power lines, including possible earthing of individual pipe joints.

7.5.6 The Contractor shall adequately anchor the pipe on steep slopes and where the ROU condition dictates, to prevent the pipe from sliding or rolling from skids.

7.5.7 It shall be the responsibility of the Contractor to ensure that pipe is strung in accordance with the approved drawings for the proper placement of pipe by size, thickness, grade and other specifications. Any additional handling of pipes resulting from failure to, comply with these requirements shall be at the Contractor's expense.

7.5.8 In case line pipe supply is by different Manufacturers, the, Contractor shall string all line pipe of one Manufacturer before commencing the stringing of the line pipe of another Manufacturer.

7.5.9 When parallel pipelines are being constructed, bumping against and contact with the strung sections of pipe shall be avoided, whether the stringing of the pipes for the individual lines is carried out separately or simultaneously.

7.6 REPAIR OF DAMAGED PIPES

After the pipe has been strung on the Right-of-Use, it shall be inspected by the Contractor and the Company and all defective pipe ends repaired. Defective pipes shall be repaired or rejected as the Company may direct as per the requirements of this Specification.

7.7 MATERIALS OTHER THAN LINE PIPE

7.7.1 Contractor shall receive and take over against requisition all Company supplied materials from Company's designated place(s) of delivery as defined in the contract. Contractor shall perform visual inspection and defects, if any noted, shall be recorded separately. The Contractor shall be entitled to extra compensation for repair and rectification of such defects at the rates set forth in the "contract". Contractor shall take permission from Company before start of such repair.

7.7.2 The Contractor shall perform the necessary loading, unloading, hauling from points designated by the Company and storing, if necessary, of all materials. The Contractor shall exercise care in handling, hauling, storing and distribution of materials in order to avoid damage and deterioration of these materials and prevent their theft or loss.

7.7.3 Materials excluding line pipe shall be stored in sheltered storage. Such materials shall not be strung on the Right-of-Use but shall be transported in covered conveyances for use only at

Copyright VCS Quality Services Private Limited – All rights reserved

Digitally signed by RACHNA SHUKLA
Date: 2025.03.13 12:53:14 IST

the time of installation.

7.7.4 Contractor shall ensure that all valves and whenever applicable, other materials are fitted with suitable end covers of the type approved by Company. Materials with worked surfaces such as flanges, pipe fittings etc. must be stacked and handled so as to avoid contact with the ground or with substances that could damage them.

7.7.5 The Manufacturer's instructions regarding temperature and procedure for storing materials, which are subject to alteration of the original properties and characteristics due to unsuitable storage, must be strictly complied with and, if required, an adequate heat conditioning shall be provided for these materials.

7.7.6 When material is supplied in containers and packages, it must not be thrown or dropped, nor handled using hooks which could damage the container or the materials, either during loading/ unloading or during successive handling, until their final use.

7.7.7 Coating materials, which are susceptible of deteriorating or suffering from damages especially due to humidity, exposure to high thermal excursions or other adverse weather conditions shall be suitably stored and protected. These materials shall be kept permanently in store, supported above the ground in a dry place protected against the weather and transported for use only at the time and in the quantities necessary for immediate application. Deteriorated materials shall not be used and replaced with no extra cost to Company.

8. TRENCHING

8.1 LOCATION

8.1.1 Contractor shall excavate and maintain the pipeline trench on the staked centerline of the pipeline taking into account the curves of the pipeline.

8.1.2 In case of common ROU, the centerline of the trench shall be established from the location of existing pipeline. In case of independent ROU, the centerline of the trench shall be established from the edge of ROU.

8.2 TRENCH EXCAVATION

8.2.1 Trenching shall include all excavation, whether by trenching machine, back-hoe, power shovel, by hand, by blasting or by other methods which may be necessary to prepare a trench for the pipe with the minimum cover between top of pipe and immediate ground level as set forth in this specification.

8.2.2 Contractor shall, by any method approved by Company, dig the pipeline trench on the cleared and graded Right-of-Use.

8.2.3 In cultivable land and other areas specifically designated by the Company, top 300mm of the arable soil on the pipeline trench top width shall be excavated and stored separately, to be replaced in original position, after backfilling and compacting rest of the trench.

8.2.4 Suitable crossings shall be provided and maintained over the open ROU, where necessary, to permit general public, property owners or his tenants to cross or move stock or equipment from one side of the trench to the other.

8.2.5 Care shall be exercised to see that fresh soil recovered from trenching operation, intended

Copyright VCS Quality Services Private Limited – All rights reserved

Digitally signed by RACHNA SHUKLA
Date: 2025.03.13 12:53:14 IST

to be used for backfilling over the laid pipe in the trench, is not mixed with loose debris or foreign material. The excavated material shall never be deposited over or against the strung pipe.

8.2.6 In steep slope areas or on the hillside, before commencing the works, proper barriers or other protection shall be provided to prevent the removed materials from rolling downhill.

8.2.7 On slopes wherever there is danger of landslide, the pipeline trench shall be maintained open only for the time strictly necessary. Moreover, the Company may require manual excavation of trench, local route detouring and limiting the period of execution of the works. The Contractor shall make adequate arrangements for safe working of the personnel involved in manual excavation of trench.

8.2.8 In certain sloppy sections, before the trench cuts through the water table, proper drainage shall be ensured both near the ditch and the Right-of-Use in order to guarantee soil stability.

8.2.9 All sewers, drain ditches and other natural waterways involved in the execution of the works shall be maintained open and functional. The same applies to canals, irrigation canals, and pipelines and buried facilities crossed by the ditch for which temporary pipelines shall be laid, if required, and proper temporary installations provided.

8.2.10 All sewers drain ditches and other natural waterways involved in the execution of the works shall be maintained open and functional.

8.3 NORMAL COVER AND TRENCH DIMENSIONS

The trench shall be excavated to a minimum depth sufficient to provide the minimum cover as specified below. The dimensions in the table below shall govern except as noted herein or as shown on the job standards or detailed construction document/ drawings or as required by authorities having jurisdiction, whichever is stringent.

Location		Minimum Cover in (Mtr)	
		Gas Pipeline	Liquid Pipeline
1	Residential Area, Industrial, Commercial Area	1	1.2
2	Minor water crossing/ steam/ drain nala/ canals	1.5	
3	River crossing for which scour depth is defined (below scour)	2.5	
4	River crossing for Rocky strata	1.5	
5	Uncased/ Cased Road Crossing/ Station approach	1.2	
6	Rocky Terrain	1	
7	Cased Railway Crossing	1.7	
8	Marshy land and creek area	1.5	

Copyright VCS Quality Services Private Limited – All rights reserved

Digitally signed by RACHNA SHUKLA
Date: 2025.03.13 12:53:14 IST

9	Area under influence of tides	1.5
10	Drainage, ditches at road/ railway crossing	1.2

Note

- Minimum depth of cover shall be measured from the top of pipe corrosion/ concrete weight coating (as applicable) to the top of undisturbed surface of the soil or top of graded working strip or top of road or top of rail whichever is lower.
- Fill material in working strip shall not be considered to add to the depth of cover. However, surface of fill material placed to fill hollows may be used to determine the depth of cover subject to prior approval by Company.
- In case the Pipeline is located within 15 mtr from any dwelling unit, the cover shall be increased by 300mm over and above that specified.

8.4 EXTRA DEPTH AND CLEARANCE

8.4.1 At points where the contour of the earth may require extra depth to fit the minimum radius of the bend as specified or to eliminate unnecessary bending of the pipe or where a deep trench is required at the approaches to crossings of roadways, railroads, rivers, streams, drainage ditches, and the like and in transition between normal trench and deep trench, the Contractor shall excavate such additional depth as may be necessary.

8.4.2 The Contractor shall excavate to additional depth where the pipeline approaches and crosses other pipelines, sewers, drain pipes, water mains, telephone conduits and other underground structures, so that the pipeline may be laid with at least 500 mm free clearance from the obstacle or as specified in the standards, or greater as may be required by authorities having jurisdiction over it.

8.4.3 In those areas where trench to be padded with select soil such as rocky areas, seismic zone crossings, station approaches etc. the trench shall be made deeper, to accommodate specified thickness of bedding and/ or padding, than otherwise required to maintain specified cover. Thickness of bedding and/ or padding required shall be as specified in the Contract drawings and documents.

8.5 TRENCHING AT CROSSING

Before excavating the trench across thoroughfare such as roads, tracks, and wherever public access to be normally expected, approval of the crossing shall' be obtained by the Contractor from the concerned authorities. Temporary diversions to permit the traffic shall be provided.

8.6 TRENCHING WITHIN OR ADJACENT TO OTHER UTILITIES

8.6.1 At locations, where pipeline is to be installed within the ROU or the body of a road, canal, dyke or other locations under jurisdiction of government/ public bodies, the Contractor shall perform such work, according to the requirement of concerned Authorities. When it becomes necessary, the Contractor shall resort to manual digging, well point drain, erection of sheet piling or any other special construction method in these areas without any extra cost to Company. The facilities damaged during trenching shall be restored; to their original

Copyright VCS Quality Services Private Limited – All rights reserved

Digitally signed by RACHNA SHUKLA
Date: 2025.03.13 12:53:14 IST

condition to the satisfaction of concerned authority.

8.6.2 In locations, where the pipeline has to be laid more or less parallel to an existing service such as pipeline, cable and/ or other utilities within the ROU, the Contractor shall carryout Trenching as per the requirements of the owners/ authorities of that service. At such locations; the Contractor shall perform the work in such a way that even under the worst weather and flooding conditions, the existing pipeline/ utilities remain stable.

8.7 ENCROACHMENTS AND WORKING NEAR EXISTING PIPELINE AND OTHER UTILITIES

Contractor shall be liable for any damage occurring to, or resulting from damage to other pipelines, underground structures/ utilities, as laid down in clause of this specification. Contractor shall make trial pits at minimum intervals of 100 m along the straight route and at suitable less intervals along the curves in the pipeline route to establish the centerline clearing the existing utilities to avoid damage to the existing utilities during the construction of new pipeline.

The location of a new buried pipeline, when running parallel to an existing buried pipeline, should be at a minimum clear distance of 5.0 meters from the existing underground pipeline when heavy conventional construction equipment is expected to be utilized. This distance may be reduced after careful assessment of construction methodologies so that it does not result in unsafe conditions during construction. In any case the minimum clear distance shall not be less than 3.0 meters.

Existing pipeline should be clearly marked on the ground during construction so as to avoid any machinery movement or dumping of excavated earth over the existing pipelines. Bi-language (local language and Hindi / English) caution signs should be installed while working in such areas. In case the movement of machinery over the existing pipelines is unavoidable, the required area over the existing pipeline need to prepared with earth to ensure an additional cover of 1m. The machinery movement shall be restricted to such area only. The contractor has to do all such preparation with no additional cost to the Company.

8.8 PROVISIONS FOR NEGATIVE BUOYANCY TO THE PIPE

8.8.1 Contractor shall check if up-floating of Pipeline is present in open trench and then shall take appropriate measures to prevent up-floating such as applying soil dams and dewatering of trench or temporary filling of water into the line (in exceptional cases).

8.8.2 In the case of water on the ditch bottom when the pipeline is being laid, the ditch shall be drained to the extent and for the time required to make a visual inspection of the ditch bottom. After this inspection, the presence of water will be allowed provided its level does not cause sliding of the ditch sides and pipe floating before backfilling when no concrete weighing is provided.

8.8.3 The water pumped out of the ditch shall be discharged into a natural water course.

8.8.4 Whenever up-floating of the pipeline after backfilling is to be reckoned with, anti-buoyancy measures shall be provided by Contractor with Company's approval for such areas of

Copyright VCS Quality Services Private Limited – All rights reserved

Digitally signed by RACHNA SHUKLA
Date: 2025.03.13 12:53:14 IST

construction, using one or a combination of the following methods.

- Weighing by applying a continuous concrete coating around the pipe.
- Weighing by -installing gravel filled Geotextile bags.
- Installing of soil Bund over the pipeline in trench during lowering.
- Deeper burial of pipeline.
- Provision of select backfill material.

The above provisions shall be in accordance with the relevant specifications and/ or job standards/ drawings.

Contractor shall indicate the option(s) selected to Company for review and approval along with calculations, wherever applicable.

8.9 CUTTING AND REMOVAL OF PAVING

8.9.1 Whenever permitted by Authorities and/ or Company representative to open cut a trench in a paved road crossing or where the line is routed within the road pavement, the Contractor shall remove the paving in accordance with the restrictions and requirements of the Authorities having jurisdiction thereof or as directed by Company Representative. After laying the pipeline, in paved area, the trench shall be backfilled immediately to restore the area temporarily. Throughout the period of execution of work in such areas, the Contractor shall provide and use warning signs, traffic lights or lanterns, barricades, fencing, watchman, etc. as required by the local authorities having jurisdiction and/ or Company Representative.

8.9.2 For all roads, paths, walkways etc. which are open-cut, the Contractor shall provide temporary diversions properly constructed to allow the passage of normal traffic with the minimum of inconvenience and interruptions.

8.9.3 The paving shall be restored to its original condition after the pipeline is installed to the entire satisfaction of concerned authorities.

8.10 GRADES, BENDS AND FINISH OF TRENCH

8.10.1 The trench is to be well made to provide a firm, uniform and continuous support for the pipe. Bends shall be made in the pipe at significant changes in grade of the trench. Company reserves the right to set the grade of the trench at location of the bends if so desired, in which case Contractor shall excavate, at no extra cost, the trench and bend the pipe to such a grade. Company desires reduce to a minimum the required number of cold field bends to lay the pipe to conform to the general contour of the ground and maintain a normal cover. This can be accomplished by cutting the trench slightly deeper at the crest of ridges and by gradually deepening the trench in approaches to crossings. Such trenching work shall be done by Contractor at no extra cost to the Company.

8.10.2 Company intends that there will be a minimum of hand grading of the trench bottom. However, to achieve this, Contractor will have to dig as square a bottom of the trench as possible with the equipment. This in part can be obtained by adjusting and adopting the crumbing shoe and digging teeth of the trenching machines and by use of a drag behind the trenching machines or manually dressing-up the same. Contractor shall do such hand work in the trench as is necessary to free the bottom of the trench from loose rock and hard clay

Copyright VCS Quality Services Private Limited – All rights reserved

Digitally signed by RACHNA SHUKLA
Date: 2025.03.13 12:53:14 IST

and to trim protruding roots from the bottom and side walls of the trench.

8.11 PADDING

8.11.1 In all cases where rock or gravel or marram/ hard soil is encountered in the bottom of the trench, trench padding shall be provided. The thickness of padding shall be at least 200 mm or more throughout the trench so that thickness of compacted padding shall not be less than 150mm. In those areas, trench shall be suitably excavated to keep min cover as required. Company will decide the extent of trench padding required.

8.11.2 Acceptable padding shall be placed under the pipeline before its installation, and around after installation to establish at both sides and on top of the pipe a permanent layer of padding. The thickness of compacted padding on top of pipe corrosion coating shall be at least 150mm.

8.11.3 Padding materials that are approved by Company shall be graded soil/ sand and/ or other soft materials containing no gravel, rock, or lumps of hard soil. Sand used for padding shall-pass through sieve size ASTM C33 No. 16.

8.11.4 When specified in the Contract, rock shield may be used in place of or in addition to sand padding as indicated above. Such rock shield shall be in accordance with the specification issued for the purpose and shall be subject to Company approval.

8.11.5 Padding shall also be required at other locations where select backfill is specified in the drawings and documents such as seismic zone crossings, station approaches, etc. Type of padding soil and thickness of padding in such areas shall be as specified in drawings and documents.

8.12 TRENCH PROTECTION

8.12.1 The trench shall be maintained in good condition till such time the pipeline is laid. When required, lumber, sheet-piling jacks or other materials that may be necessary to shore the trench, in order to prevent caving, shall be provided and removed by the Contractor.

8.12.2 The Contractor shall dewater the trench, if necessary, using well point system or other suitable systems, or do what else might be required to excavate the trench, install the pipe in it and backfill the trench as per approved procedure with no extra cost to company.

9. BLASTING

9.1 GENERAL

9.1.1 Contractor shall be responsible for carryout of trenching in rocky areas by controlled blasting and removal of scattered rock and debris caused by the blasting from the Right-of-Use and/ or adjacent property, as part of his work. All necessary precautions shall be taken to prevent stones from falling outside the ROU and in cultivated areas and to avoid any damage to the installations and properties existing nearby. Blasting and removal of debris shall be carried out prior to stringing the pipes.

9.1.2 The Contractor shall acquaint himself and comply with all the applicable local laws and regulations concerning storing, handling and the use of explosives. All such laws, regulations and rules etc., as enforced from time to time shall be binding upon the Contractor. National/ Local Laws and Regulations shall take precedence over this

Copyright VCS Quality Services Private Limited – All rights reserved

Digitally signed by RACHNA SHUKLA
Date: 2025.03.13 12:53:14 IST

specification in the event of conflict. The requirements stated herein, however, in no way relieve the Contractor of his responsibility of carrying out safe blasting operations and the Contractor shall be solely responsible for damages and claims thereof.

9.1.3 Every possible precaution shall be taken to prevent injuries and damages to persons and properties during blasting operations. The Contractor shall be responsible for removal of scattered rock and debris caused by the blasting from the ROU and/ or adjacent property.

9.1.4 The use of explosives requires an approval from the Chief Inspector of' Explosives and/ or his authorized Inspector. It shall be the responsibility of the Contractor to obtain all such permits 'and observe all requirements regarding the safe storage handling and use of explosives.

9.1.5 Blasting and removal of debris shall be carried out prior to stringing the pipes.

9.1.6 Company reserves the right to refuse blasting where possible danger exists to property, existing utilities or other structures. In such locations other methods of extracting rock shall be proposed by Contractor and shall be approved by Company.

9.2 BLASTING CLOSE TO EXISTING SERVICES

Contractor shall prepare a detailed blasting procedure incorporating the following:

- Loading of explosives.
- Drilling of new holes and extending existing holes.
- Handling of explosives at site.
- Tamping explosives into holes.
- Machines, tools and cables required.
- Initiation of blasting.
- Safety of personnel.
- Vibration control.
- Blast pattern and shot size establishment.
- Misfires.
- Emergency procedures
- Following approval by the Company representative, the procedures shall be closely followed by the Contractor and demos need to be shown by the contractor to assess the blasting impact on other existing services and / or facilities. Accordingly suitable modifications to be considered till the procedure is finally qualified and approved by the company. .

10. PIPE BEND/ BENDING

10.1 GENERAL

10.1.1 The Contractor shall preferably provide for changes of vertical and horizontal alignment by making elastic bends. Cold field bends may be provided, at the Contractor's option for change of direction and slope.

10.1.2 In general, elastic bends or one or more cold field bends will permit construction of most of the direction changes required, however where in the judgment of Company, due to site conditions, even cold field bends cannot be accommodated, the Company may allow use of

Copyright VCS Quality Services Private Limited – All rights reserved

Digitally signed by RACHNA SHUKLA
Date: 2025.03.13 12:53:14 IST

hot induction bends.

10.1.3 Use of miter bends for change in direction and slope is not permitted.

10.2 ELASTIC BENDS

The minimum allowable radius for elastic bends for corrosion coated as well as concrete coated buried pipeline shall be as indicated in relevant job standards document drawings elastic bend shall be continuously supported over its full length. A radius smaller than permitted in elastic bending shall require a cold field bend.

10.3 COLD FIELD BENDS

10.3.1 The minimum radius of cold field bends shall be as indicated in the below table:

Nominal Pipe Size (Inch)	Minimum Bend Radius
12 and below	21D
14 to 16	30D
18 and above	40D

10.3.2 Contractor shall use a pipe bending machine of adequate capacity and employ recognized and accepted methods of bending of coated pipe in accordance with good pipeline construction practice. However, bending machines shall be capable of making bends without wrinkles, buckles, stretching and with minimum damage to the coating.

10.3.3 Contractor shall, before the start of the work, submit and demonstrate to Company a bending procedure, which shall conform to the recommendations of the manufacturer of the bending machine. The Qualification shall be done for the maximum bend angle in one pipe length. The procedure shall include amongst other steps-lengths, maximum degree per pull and method and accuracy of measurement during pulling of the bend. The bending procedure and the equipment used shall be subject to Company's approval with regard to the quality of bend in terms of wrinkles / buckles, stretches and any other damages.

10.3.4 Pipes with longitudinal welds shall be bent in such a way that the weld lies in the plane passing through the neutral axis of the bend, which shall be installed positioning the longitudinal weld in the upper quadrants. If horizontal deviations are to be achieved by joining more adjacent bends, the bending of the pipe lengths shall be made by positioning the longitudinal welds alternatively 70mm above and below the plane passing through the neutral axis in-such a way that the bends are welded with the longitudinal welds displaced by about 150mm and situated in the upper quadrants. In case of vertical bends formed, from a number of pipe lengths, the longitudinal welds shall be positioned on the plane passing through the neutral axis of the bend to the right and left alternatively.

10.3.5 The pads, dies and rolls of the bending equipment shall have relatively soft surfaces to avoid damage to the pipe coating. Where applicable, fully retaining bending shoes shall be used. Roller type bending machines are preferred.

10.3.6 The ends of each bent length shall be straight and not involved anyway in the bending. The

Copyright VCS Quality Services Private Limited – All rights reserved

Digitally signed by RACHNA SHUKLA
Date: 2025.03.13 12:53:14 IST

length of the straight section shall permit easy joining. In no event shall the end of the bend be closer than 1.5m from the end of a pipe or within one meter of a girth weld.

10.3.7 The ovality caused on each pipe by bending shall be less than 2.5% of the specified diameter at any point. Ovality is defined as the reduction or increase in the internal diameter, of the pipe compared with the nominal internal diameter. A check shall be performed on all bends in the presence of Company Representative by passing a gauge consisting of two metallic discs with a diameter equal to 95% of the nominal internal diameter of the pipe connected rigidly together at a distance equal to 300mm.

10.3.8 The wall thickness of finished bends, taking into account wall thinning at the outer radius, should not be less than the design thickness. An indication of wall thinning as a percentage is given by the following empirical formula.

$$\text{Wall thinning} = \frac{50}{n+1}$$

10.3.9 Where 'n' is the inner bend radius divided by pipe diameter. Pipes with measured wall thickness greater than the nominal wall thickness (i.e. with +ve tolerance) shall normally be used for making cold field bends.

10.3.10 Cold bend pipes on site shall have the corrosion coating carefully checked with the aid of a holiday detector for cracks in the coating down to the pipe wall. It must also be checked whether the coating has dis-bonded from the pipe wall during bending by beating with a wooden mallet along the outer radius. Any defects or dis-bonding of the coating caused during bending (also forced ridges in the coating) shall be repaired at the Contractor's expense in accordance with Company approved procedures.

10.3.11 When pipelines are laid in parallel, the horizontal bends shall be concentric.

10.4 MITER AND UNSATISFACTORY BENDS

All bends showing buckling, wrinkles, cracks or other visible defects or which are in any way in disagreement, in whole or in part, with this specification shall be rejected.

No miter bends shall be permitted in the construction of the pipe line. Contractor shall cut out and remove any bend or bends, which do not meet the specifications and shall replace the same with bends complying with specification at no additional cost to the Company. In the event the contract provides for supply of line pipe by Company, the pipes required for replacement will be furnished by Company, but the cost of replacement of such pipes shall be borne by Contractor.

Cutting of cold field bends for any purpose are not permitted.

10.5 HOT INDUCTION BENDS

Use of Hot Induction bends is as indicated in alignment sheets, crossing drawings and station drawings. Cutting of factory made bends for any purpose is not permitted.

11. LINEUP AND WELDING

11.1 PIPE CLEANING

Prior to aligning and welding of pipes, each length of pipe shall be thoroughly examined

Copyright VCS Quality Services Private Limited – All rights reserved

Digitally signed by RACHNA SHUKLA
Date: 2025.03.13 12:53:14 IST

internally and externally to make sure that it is free from visual defects, damage, severe corrosion, dirt, animals or any other foreign objects. Each length of the pipe shall be adequately swabbed, either by use of canvas belt disc of proper diameter, or by compressed air blowing or by other methods approved by Company Representative. Directions of Company Representative shall be followed in case of damaged/ corroded pipes. Each length of pipe shall be pulled through just before being welded.

11.2 REPAIR OF PIPE DEFECTS

It is Contractor's responsibility to repair all internal and/ or external defects.

11.2.1 Acceptability of defects in the pipe detected during inspection at the work site shall be determined in accordance with latest edition of Company's own material specification or code ASME B31.8/ B31.4 whichever is more stringent.

11.2.2 The maximum permissible depth of dents in pipes shall be as per applicable line pipe specification issued by Company.

11.2.3 Dents, which contain a stress concentrator such as scratch, gauge, arc burn or groove, and dents located at the longitudinal, spiral or circumferential weld shall be removed by cutting out the damaged portion of pipe as a cylinder.

11.2.4 Repair on line pipe shall be executed as specified in Company's material specification or Code ASME B 31.8/ B 31.4, whichever is more stringent. A record of all repairs shall be maintained by Contractor. This record, provided with the pipe identification number shall be submitted to the Company.

11.2.5 If due to cutting or repairs, the pipe identification number is removed, it shall be reprinted immediately by Contractor in the presence of Company. In the event, the Contract provides for supply of line pipe by Company, Contractor shall be charged for any pipe length due to loss of identification number. No pipe without identification number shall be transported and/ or welded into the pipeline.

11.2.6 Repair of damaged pipe ends by hammering and/ or heating is not allowed. If the dented area is minor and at least 200mm away from the pipe end, and the steel is not stretched, severed, or split in the Company's opinion, the pipe may be straightened with a proper jack.

11.3 PIPE HANDLING AND SKID SPACING

11.3.1 When lifting pipe, care must be taken not to kink or overstress it. Pipe slings approved by Company Representative shall be used. The Contractor shall submit the method of skidding and skid spacing to Company Representative for approval. A strip of soft material shall be placed in between skid and pipe to protect the external coating from damage.

11.3.2 Skids shall be used to raise the pipe sufficiently to accommodate welding and wrapping of joints. Skids shall be at least 1.20 meter long and of sufficient height to maintain pipe bottom at least 500 mm above ground. Width of skids in contact with the pipe shall be 200 mm and 150 mm for pipe with outside diameter (OD) ≥ 324 mm and OD < 324 mm respectively.

11.3.3 Crosses shall be installed at frequent intervals, at least every 10th support with greater number required at bends and undulating ground.

11.4 WELDING

Copyright VCS Quality Services Private Limited – All rights reserved

Digitally signed by RACHNA SHUKLA
Date: 2025.03.13 12:53:14 IST

11.4.1 All rust and foreign matters shall be removed from the beveled ends by power operated brush. This shall be effected inside & outside and for a minimum distance of 25 mm from edge of bevel. The bevel shall be thoroughly inspected at this stage. Should laminations, spilt ends or manufacturing defects in the pipe observed, the length of the pipe containing such defects shall be removed from the line in accordance with relevant specification.

11.4.2 The welding of the pipe ends shall be done strictly in compliance with the specification for welding.

11.4.3 The Contractor shall cover the open end of the pipe string during welding to prevent draft. The ends of the pipe string shall be located such that water, mud and debris cannot enter the pipe.

11.5 NIGHT CAPS

11.5.1 At the end of each day's working or every time when joining and welding operations are interrupted, the open ends on the welded strings of pipes shall be capped with mechanical metal cap or plug, approved by Company Representative, so as to prevent the entry of dirt or any foreign matter into the pipeline. These covers shall be removed just before resuming welding operations. Night caps shall also be fixed to the welding completed pipeline section which shall be removed only during Tie-in welding. Whenever the welded strings of pipes are left to be tied in later and at road, railroad, river, marshy crossings, etc, night caps shall be welded to the ends of the pipe. Work at these locations, the end caps shall be cut as a cylinder bevel end prepared. Cut shall be made at least 25 mm from the end.

12. LOWERING-IN

12.1 TRENCH CLEANING

Lowering can start after removal from ditch bottom of all off cuts, pipe supports, stones, roots, debris, stakes, rock projections below underside of pipe and any other rigid materials which could lead to perforation or tearing of the coating. Sand padding, graded soil and/ or other materials containing no gravel, rock shall be provided as required in accordance with clause 8.12 of this specification in such a way to get an even surface for pipe laying.

12.2 LOWERING-IN

12.2.1 Lowering shall follow as soon as possible, after completion of the joint coating of the pipe string, after the trench bottom is prepared and levels checked for proper fit and cover.

12.2.2 Before lowering in, visual inspection and holiday detection using a full circle holiday detector shall be carried out for the pipe coating as well as joint coating and all repairs carried out as per relevant Specification. All points on the pipeline where the coating has been in contact with either the skids or with the lifting equipment during lowering shall be carefully inspected for damages, dents or other defects and shall be completely repaired.

12.2.3 The Pipeline section which is made ready for lowering shall be checked for debris and if necessary, cleaned from inside using Pig with dry compressed air to remove debris.

12.2.4 The pipeline shall be lifted and lowered into trench using suitable equipment having flat belts of nonabrasive material. Care shall be exercised while removing the flat belts from around the coated pipe after it has been lowered into the trench to avoid any damage to coating. Lowering-in utilizing standard pipe cradles shall be permitted if the Contractor demonstrates

Copyright VCS Quality Services Private Limited – All rights reserved

Digitally signed by RACHNA SHUKLA
Date: 2025.03.13 12:53:14 IST

that pipe coating is not damaged. No sling shall be put around field joint coating.

12.2.5 Laying shall be carried out under safe conditions so as to avoid stresses and temporary deformations of the equipment's, which may cause damage to the pipeline itself and to the coating. In case of localized points where the right-of-use is restricted to the minimum necessary for the transit of mechanical equipment, the laying shall be carried out using other suitable means. The pipe shall be placed on the floor of the excavation, without jerking, falling, impact or other similar stresses. In particular, care must be taken that the deformation caused during the raising of the pipe from the supports, does not exceed the values for the minimum allowable radius of elastic curvature, so as to keep the stresses on the steel and on the coating within safe limits. The portion of the pipeline between trench and bank shall be supported by as many side-booms as required and approved by Company for holding the line in gentle S-curve maintaining minimum elastic bend radius -as specified in job standard. Lowering in and back-filling shall preferably be carried out at the highest ambient temperature.

12.2.6 Lowering-in shall preferably be carried out at the highest ambient temperature. Where water is present, no lowering is permitted until the ditch is drained to the extent and for the time necessary to make visual inspection possible of the bed. Following such inspection, the presence of water will be permitted, provided that it is not so high as to cause cave-in of the walls of the trench or floating of the pipeline before backfilling when anti-buoyancy measures are not provided for the pipe. Where water in the trench cannot be practically removed, the lowering-in of the pipeline shall be permitted only after ensuring pipe negative buoyancy is sufficiently increased by continuous concrete weight coating or by placement of gravel filled non degradable fabric bags as per requirements of the Contract and approved by Company representative. In any case, pipe shall not be lowered into a trench containing water until the longitudinal profile of the trench bottom has been fully surveyed by Contractor and approved by Company representative.

12.2.7 Contractor shall take precautions immediately after lowering in to prevent the movement of the pipe in trench.

12.2.8 Contractor shall close the two ends of the lowered section with night caps against ingress of water/ mud or any foreign material in the section.

12.2.9 When parallel pipelines are lowered into same trench, the minimum distances between the pipelines indicated in the approved drawings shall be maintained. Once the first pipeline has been positioned, it shall in no way be disturbed while lowering of the subsequent pipelines. At every seven meters along the trench sand/ earth filled bags shall be placed between the parallel pipelines so as to ensure maintenance of the minimum stipulated distance between the parallel lines.

12.2.10 Subsequent to lowering a pipe section, level of the trench bottom and level by the side of the trench shall be taken at those locations where levels were taken prior to lowering. Cover shall be ascertained based on the level difference. If the cover is not as per the requirements of this specification, the pipe section shall be removed from the trench and the trench rectified, so that the cover is as per the requirements of this specification is met.

12.3 OVERHEAD SECTIONS AND SECTIONS IN TUNNEL

12.3.1 The following works shall be completed before proceeding with the assembly and laying of overhead pipeline.

Copyright VCS Quality Services Private Limited – All rights reserved

Digitally signed by RACHNA SHUKLA
Date: 2025.03.13 12:53:14 IST

- Construction of the pipe support structures.
- Paints and/ or coating of the pipe work, as indicated in the engineering specification.

12.3.2 The erection of the supports shall be carried out taking care that the elevation and alignment is in accordance with the drawings.

In the case of metal work supports, pre-fabrication and/ or assembly shall take into account the maximum allowed free span and the supports shall not interfere with the pipeline welds.

12.3.3 In case roller supports are used, the rollers shall be lubricated, and then checked for smooth rotation and, in case of seizure, the defect shall be repaired or roller shall be replaced. In the case of overhead section where the pipeline is slanting, the alignment of the end supports shall be made after placing the pipeline in position. Before installation of the pipe section, all the rollers shall be perfectly centered acting on the seat of the support's plates.

The above alignment operations shall be carried out before connecting the overhead section with the end of the buried section.

12.3.4 Lifting, moving and laying of the pipeline shall be carried out in accordance with the provisions of clause.

An insulation sheet shall be installed to isolate the pipe from the support or support from the earth. The sheet shall be hard polyethylene at least 5mm thick. It shall extend at least to 1 cm outside the saddles or clamps.

12.3.5 Moving supports, if any, shall be centered on their support and allow for a movement of at least 300mm in both directions.

12.3.6 A comprehensive report/ method statement on the laying operation to be used shall be submitted to the Company well in advance for approval. The report as a minimum shall include, but not limited to the following:

- Method of installation by lifting (as a preferred method).
- Pulling method and related calculations, whenever lifting method cannot be used.
- Pulling device and its characteristics including available pull force and FOS/ margin available w.r.t. calculated pulling load.
- Method of anchoring the pulling device.
- Characteristics of the pulling rope.
- Braking device, if any.
- Pipeline assembly system.

13. BACKFILLING

13.1 Backfilling shall not be done until the pipe and appurtenances have the proper fit and the pipe is following the trench profile at the required depth that will provide the required cover and has a bed which is free of extraneous material and which allows the pipe to rest smoothly and evenly. Contractors shall take Company's approval before start of backfilling. If any backfilling is done without Company's approval, Company will have the right to require removal of the backfill for examination, and the cost of such uncovering and refilling shall be borne by Contractor. Backfilling of trench in water courses shall be carried out as per the relevant specifications issued for the purpose.

Copyright VCS Quality Services Private Limited – All rights reserved

Digitally signed by RACHNA SHUKLA
Date: 2025.03.13 12:53:14 IST

13.2 Backfilling shall be carried out immediately after the pipeline has been laid in the trench, inspected and approved by the Company Representative, so as to provide a natural anchorage for the pipeline, thus avoiding long exposure of coating to sliding down of trench side's, damage of coating and pipe movement in the trench. If immediate back filling is not possible, a covering of at least 200mm of earth, free of rock and hard lumps shall be placed over and around the pipe and coating. On no account the top soil from the ROU be used for this purpose. In general, the trench shall be dry during backfilling. Deviations thereof must have prior approval of the Company.

13.3 The backfill material shall contain no extraneous material and/ or hard lumps of soil, which could damage the pipe and/ or coating or leave voids in the backfield trench.

13.4 After the initial backfill has been placed into the trench to a level slightly above the surrounding ground, Contractor shall compact the backfill material. The surplus material shall be neatly crowned directly over the trench and the adjacent excavated areas on both sides of the trench, to such a height, which will, in Company's opinion, provide adequately for future settlement of the trench backfill. The crown shall be high enough to prevent the formation of a depression in the soil when backfill has settled into its permanent position. Should depression occur after backfill, Contractor shall be responsible for remedial work at no extra cost to Company. Surplus material, including rock, left from this operation shall be disposed of to the satisfaction of land owner or authority having jurisdiction at no extra cost to the Company.

13.5 Rock, gravel, lumps of hard, soil or like materials shall not be backfield directly onto the pipe unless padding and/ or rock-shield has been provided as per the specification. Where rock, gravel, lumps of hard soil or like materials are encountered at the time of trench excavation, sufficient earth, sand or select backfill materials shall be placed around and over the pipe to form a protective cushion extending at least to a compacted height of 150mm above the top of the pipe.

13.6 In cases where pipeline crosses through seismic zone, as indicated in project document, the backfilling shall be done with select backfill as per the drawing provided elsewhere. Select backfill materials for padding that are acceptable to Company shall be soil, sand, clay or other material containing no gravel, rock or lumps of hard soil. All these works shall be carried out by Contractor at no extra cost to Company.

13.7 When the trench has been dug through driveways or roads, all backfills shall be executed with sand or a suitable material as approved by Company Representative and shall be thoroughly compacted. In certain cases, special compaction methods, such as moistening or ramming of the backfill in layers may be required by any public or private authority having jurisdiction over a road, street or driveway. Authorities may also require the top section of trench of such paved areas to be backfill with crushed rock or some other purchased material and surface repaved. The Contractor shall comply with said requirements at no extra cost to Company. Backfilling and compaction of trenches crossing public thoroughfares shall be carefully and expeditiously carried out so as to reduce to a minimum the time during which the public thoroughfare is out of service.

13.8 Trenches excavated in dikes which are the property of railways or which are parts of main roads shall be graded and backfield in their original profile and condition. If necessary, new and/ or special backfill materials shall be supplied and worked-up. The materials required may include gravel, special stabilization materials or stabilized mixtures. Moreover, special

Copyright VCS Quality Services Private Limited – All rights reserved

Digitally signed by RACHNA SHUKLA
Date: 2025.03.13 12:53:14 IST

processing and/ or compacting methods shall require the approval of Company and/ or competent authorities.

13.9 Stone-pitching/ cement lining of Dyke walls if dismantled during excavation shall be restored to its original condition after backfilling and compaction to the entire satisfaction of Company and concerned Authorities.

13.10 The trench in irrigated and paddy fields shall be backfield to within 300mm of the top, then rammed and further backfield until the trench is completely- backfield. Surplus material remaining after the operation shall be spread over the ROU.

13.11 At the end of each day's work, backfilling shall not be more than 500 meters behind the head end of lowered-in pipe, which has been padded and approved for backfill. The backfill shall be maintained by Contractor against washouts and spreading etc., until the completion and final acceptance of the work by Company.

13.12 The Contractor shall furnish materials and install breakers in the trench in steep areas (slope generally 10% and more) for the purpose of preventing erosion of the back fill. The type of breakers installed shall be as per applicable Contract drawings. Sacks filled with sand mixed with cement in the ratio of 6:1 shall be placed to act as a trench barrier. Such works shall be at no extra cost to Company. The Contractor shall pay attention to the direction of backfilling in such steep areas. Barrier consisting of two rows of sacks across the trench built on a staggered basis to provide maximum stability, and keyed into the trench wall may be used in gently sloping locations. The top of trench barriers shall be 200 mm - 300 mm below ground level. Trench barriers shall be bedded onto undisturbed ground. No voids shall be left in the trench barrier wall including between the wall and the pipe.

13.13 In addition to trench barriers when potential to backfill wash out exist due to water flow, shallow surface ditches shall be dug as necessary to channel water diverted by the trench barrier away from the pipe trench and into normal drainage followed before laying of the line. In no case, the water is to be drained via the trench or via channels other than those followed before the line was laid.

13.14 Stabilization of backfill shall be carried out by the Contractor in sandy areas and other such places, as directed by the Company representative. The Contractor shall carry out the stabilization to have a consolidated cover over the pipeline at no extra cost to Company.

13.15 The backfill shall be stabilized preferably with 150 mm layer of marl, mattresses of gatch other than straw or other stable materials. The width of stabilization shall be at least 3.0 meters on either side of the pipeline, plus one meter for every 10 meters height of sand dune (where the line passes through the dune areas).

13.16 Contractor shall leave the pipe uncovered at certain locations to allow Company to survey the top of the pipe and the level of the pipeline in the backfield trench. Within 48 hours after backfilling, Company shall have carried out such survey and informed Contractor of any realigning, if required. Thereafter Contractor shall compact the backfill.

13.17 Temporary markers shall be installed during backfilling and the survey as per specification to locate the pipeline axis. These markers shall then be replaced with permanent pipeline markers.

13.18 Backfilling shall be preferably carried out at the highest ambient temperature.

Copyright VCS Quality Services Private Limited – All rights reserved

Digitally signed by RACHNA SHUKLA
Date: 2025.03.13 12:53:14 IST

13.19 In certain areas like U/G pipeline crossings, overhead power cable crossings etc., special care to be taken by putting concrete slab/ plastic grating before backfilling. Size and thickness of concrete slab/ plastic grating shall comply applicable job standard and approved by Company.

14. TIE-IN

14.1 The unconnected sections of the pipeline at various locations have to be tied in after the sections are coated, lowered and backfield. The sections to be connected shall have at the ends, sections of over lapping, uncovered pipe of sufficient length to absorb, without inducing excessive stresses in the steel, small displacements necessary for perfect alignment and connection of the ends.

14.2 Tie-in shall preferably be carried out at ambient temperatures corresponding to the average operating temperature in the case of a pipeline conveying fluids at normal temperatures and at the maximum ambient temperature in the case where the pipeline is carrying fluids at high temperature.

14.3 Contractor shall carry out tie-in-welding (including necessary cutting, beveling, grinding of pipe weld seams and line-up etc.) cleaning, priming, coating and backfilling for the tie-in portion as per relevant specifications. Contractor shall also excavate the required bell-holes for the welding. Bell holes made to facilitate welding shall provide adequate clearance to enable the welders to exercise normal welding ability and skill. All tie-in welds shall be radiographically examined.

14.4 The tie-in should be done in such a way as to leave a minimum of strain in the pipe. If necessary, with respect to the trench, realigning of the pipe shall be done to eliminate force strain in the pipe by the Contractor at no extra cost to Company.

14.5 If a pup end cannot be avoided for tie-in, the minimum length that shall be added is 1.0 meter and two or more such pups shall not be welded together. All cut-off lengths greater than 1.0 meter shall be moved ahead in order to be welded into the pipeline at a suitable location. Tie-in with two or more pups may be used provided that they each have minimum length of 1.0 meter and are separated by an entire length of pipe. In no case more than three (3) welds shall be permitted on a 10 meter length of pipeline.

14.6 In connecting pipes, special items, fittings and equipment where different wall thicknesses are to be welded, Contractor shall follow the procedures indicated in ASME B3l.8/ ASME B31.4, as applicable. The required tapering shall be done by Contractor at no extra cost to Company.

14.7 For tie-in of adjacent sections of pipeline already pressure tested, the pup used for tie-in shall be of single length or off-cuts of pipe, which have already been hydrostatically tested. Contractor shall take care that sufficient number of pretested pipes with different wall. Thicknesses are readily available.

15. SPECIAL INSTALLATIONS ON THE PIPELINE

15.1 GENERAL

15.1.1 In addition to constructing the pipeline, Contractor shall also install certain other auxiliary facilities and appurtenances.

15.1.2 Contractor shall do all work necessary at each of the installations to provide facilities, which

Copyright VCS Quality Services Private Limited – All rights reserved

Digitally signed by RACHNA SHUKLA
Date: 2025.03.13 12:53:14 IST

are complete in all respects and ready for operations.

15.1.3 Without limiting the generality thereof, the work required to complete the installations shall, where applicable, include all site surveys, site preparation, filling, grading, fencing, foundations, installation of block valves, side valves, pipe work, pipe supports, pressure gauges, mechanical facilities, civil work, painting, installation of all electrical equipment's, motors, cables, conduit, wiring and fixtures and hooking up of same; installation of all instruments, piping, valves and fittings; mounting of all instruments and making all piping and electronic connections, etc.

15.1.4 On completion, all elements of each entire installation shall be checked out and tested for full and correct operation in the presence of, and to the satisfaction of Company. All work shall be carried out strictly in accordance with the appropriate codes, the approved drawings, and this and other related specifications.

15.1.5 Contractor shall fabricate all piping and install valves and fittings as required by the detailed engineering fabrication drawings prepared by him and approved by Company. Piping fabrication drawings shall be prepared by Contractor based on AFC drawings and approved by Company Representative at site.

15.1.6 Stainless steel lines will he "swaged" using permanent fittings installed with a hydraulic device.

15.2 MAINLINE VALVES STATIONS (MLV'S)

15.2.1 The Contractor shall install Mainline Valve assemblies as shown in the approved for construction drawings issued for the purpose and requirements of this specification. The Contractor shall completely assemble, test and make the MLV assembly including all related instruments etc. fully functional prior to installation in the pipeline.

15.2.2 The valve stem shall be installed in the vertical position. Valves with flow arrows shall be installed according to the normal flow in the pipeline. During welding the valve shall be in open position. Care shall be taken to avoid entry of sand particles etc. to valve body, seals etc. during assembly and installation.

15.2.3 Valve shall be installed in the pipeline in horizontal position only unless indicated otherwise in approved drawings. Installation shall be done in such a way that there is no strain in the welded joint while the pipeline at upstream and downstream side is straight.

15.2.4 The equipment and tools used for lifting and handling shall never be driven through hand wheel, valve stem, flange joints and other parts, which may cause damage / misalignment.

15.2.5 Entire MLV assembly, after fabrication, shall be tested hydrostatically ex-situ as per applicable specifications to a test pressure equal to 1.25/ 1.5 times the design pressure as applicable. As applicable all weld joints and piping components shall be inspected for leakage. Leakages if any shall be repaired and assembly retested.

15.2.6 Suitable reinforced concrete foundation(s) as per approved for construction drawings shall be constructed on which the valve assembly shall be firmly installed.

15.2.7 The Contractor shall carry out necessary excavation; cutting, beveling and welding of the tie-ins required for the installation of such assembly. The final tie-in shall not be made until the

Copyright VCS Quality Services Private Limited – All rights reserved

Digitally signed by RACHNA SHUKLA
Date: 2025.03.13 12:53:14 IST

valve is fixed in position.

15.2.8 The civil and structural work shall be carried out in accordance with the relevant specifications issued for the purpose and in accordance with the approved drawings, and as directed by Company representative. The work shall as a minimum include clearing, grading, filling, fencing, foundations, supports, etc. as required.

15.3 SCRAPER LAUNCHER AND RECEIVER FACILITIES AT STATIONS

15.3.1 Scraper launcher and receiver facilities at stations including the associated piping shall be fabricated and installed as per the approved for construction drawings. The Contractor shall completely assemble, test and make the scraper facilities including connected piping and all related instruments etc. fully functional prior to hook-up with the pipeline.

15.3.2 The Contractor shall maintain elevations shown on the approved drawings and carry out any pipe work adjustments, necessary for this purpose. Field cuts shall be square and accurate and field welds shall not be performed under stress of pipe ends.

15.3.3 The painting for the scraper stations shall be carried out as per relevant Specifications for Painting. The underground sections shall be coated with 3 Layer Polyethylene coating up to at least 300 mm above grade.

15.3.4 Entire scraper facilities including the associated piping, after fabrication, shall be tested hydrostatically to a test pressure equal to 1.5 times the design pressure as applicable. All weld joints and piping components shall be inspected for leakage. Leakages if any shall be repaired and assembly retested. Test pressure shall be maintained for minimum four (4) hours.

15.3.5 The Civil and structural works for the scraper stations shall be carried out as per the relevant specifications, in accordance With the approved for construction drawings. The work as a minimum shall include site survey, site preparation, clearing, grading, filling, fencing, foundations, etc. as required.

15.4 INSULATING JOINTS (IJS)

15.4.1 Pipeline insulating joints shall be installed in accordance with and at the locations specified in approved for construction drawings.

15.4.2 Pipe abutting insulating joints shall be aligned so that the joint is not subject to loads that induce bending or torsional moments in the joint during installation. During welding of in-line insulating joint, propagation of heat shall be avoided. To achieve this, the joint shall be kept cool by means of rags continuously wetted.

15.4.3 Insulating joints shall be electrically tested by the contractor prior to welding into the pipeline. The electrical conductance test shall be carried out using a Megger. Measurement of the insulation resistance across the joint shall be approx. one Mega Ohm. The test shall be repeated after installation and welding of the joint into the pipeline to verify that the insulating joint assembly is not damaged.

15.5 DIMENSIONAL TOLERANCES

These tolerances apply to inline items and corrections for other lines. These tolerances can be exceeded on items such as vents, drains, dummy supports, field supports, temperature and

Copyright VCS Quality Services Private Limited – All rights reserved

Digitally signed by RACHNA SHUKLA
Date: 2025.03.13 12:53:14 IST

pressure connections, where the deviation will not affect another spool.

A. General dimensions such as face to face, face or end to end, face or end to center, and center to center: ± 3mm.
B. Inclination of flange face from true in any direction: 4mm per meter.
C. Displacement of branch connection from indicated location: ± 1.6mm. When multiple branches are involved, the displacement of the branches shall not exceed 3mm from a common point.

15.6 FLANGED CONNECTIONS

Contractor shall ensure that prior to final bolting, all flange faces are parallel and centered, according to standard practice. Contractor shall not use bolting forces as a means for attaining alignment. A gasket of required size and quality shall be installed between the flanges at each joint.

Bolts shall be tightened in diagonal sequence and shall be centered with equal amounts of thread visible on both sides. Bolts shall be uniformly tightened to produce a leak-proof joint. Bolts that yield during-tightening shall be removed and discarded. It is mandatory that a torque wrench is used for bolt tightening.

15.7 THREADED CONNECTIONS

Damaged threads shall be cut from the end of a run and the pipe shall be rethreaded. Contractor shall properly align all threaded joints. Pipe entering unions shall be true to centerline so the union will not be forced during make-up. The threaded pipe shall not project through fittings to cause interference with valves or other operating mechanisms.
Except for the threaded connections of instruments, which will require periodic testing and maintenance, all threaded joints shall be seal welded. The latter joints shall be made up without pipe joint compound and with a minimum of oil from the thread cutter. Seal welds should taper into the pipe with as little discontinuity as possible, and should cover all threads. All seal welds shall be tested with DP, MP testing.

15.8 WELDED CONNECTIONS

Where the ends of the piping components being welded have an internal surface misalignment exceeding 1.6mm, the wall of the component extending internally shall be trimmed by machining so that the adjoining internal surfaces will be approximately flush. All welding shall be performed in accordance relevant specification.

15.9 PAINTING

All exposed surfaces like piping, valves, structures, and miscellaneous appurtenances shall be painted in accordance with the specifications issued for this purpose.

15.10 COATING OF BURIED INSTALLATIONS, ETC.

All buried valves, insulating joints, flow tees, bends, other in-line fittings and appurtenances shall be coated with 100% solid high build epoxy (minimum 500 micron THK) or any other equivalent suitable Company approved coating at no extra cost to Company. For buried pipes and LR bends, heat shrink sleeves relevant specification for Field Joint Coating shall be used. Contractor shall submit to Company a report regarding the method of application and the materials used along with all test certificates. Only after obtaining written approval from the

Copyright VCS Quality Services Private Limited – All rights reserved

Digitally signed by RACHNA SHUKLA
Date: 2025.03.13 12:53:14 IST

Company, Contractor shall commence the work of coating.

15.11 CIVIL WORK

Civil work shall be performed in accordance with Specifications issued for the purpose.

16. THIRD PARTY FACILITIES

16.1 GENERAL

The proposed pipeline may be required to be constructed in or adjacent to easements established by others to carry services including overhead electric transmission cables, buried fiber optic transmission cables, telephone and power cabbies gas, water and other pipelines, etc. Though the Company has endeavored to identify and locate such services known to cross or closely run parallel to the pipeline, it is possible that some such services may not have been fully delineated during the surveys and/ or changes to the services identified have occurred since the Company's surveys. The Contractor shall be responsible for delineating and protecting all such services while executing the works.

Where the works covered under the Contract parallels or crosses an existing service, the requirements of the Authorities having jurisdiction over such a service related to protection of the service from damage during the construction activities shall be identified and complied with by the Contractor.

16.2 LOCATION AND PROTECTION OF BURIED SERVICES

The Contractor shall undertake an investigation to confirm the location of services identified by the Company, and to establish the location of any other services that may interfere with the pipeline construction.

Buried services when located shall be identified by hand excavation, and each service identified shall be marked with a stake and red flag. For all such services, location (UTM co-ordinates), angle of intersection, offset distance, size, depth of cover, etc. shall be recorded by the Contractor.

Temporary under-pinning or any other type of supports and other protective measures necessary to keep the interfering structure/ utility intact shall be provided by the Contractor at his own cost and shall be of such design as to ensure stability and safety against their possible failure.

Despite all precautions, should any damage to any structure/ utility occur, the owner/ authority shall be contacted by the Contractor and repair shall forthwith be carried out by the Contractor at his expense under the direction of Company representative and the concerned owner/ authority If the Contractor fails to repair in reasonable time, Company reserves the right to have the repair executed at the cost of the Contractor.

16.3 PROTECTION AGAINST INDUCED VOLTAGE HAZARDS

Where the work covered under the Contract parallels or is in close proximity to overhead high voltage power transmission lines, potentially dangerous voltages may be induced in the pipeline and in the working environment posing danger to personnel working on the pipeline. NACE Standard RP0177 shall be followed to the extent applicable during construction for safety purposes. The Contractor shall undertake following precautions in this regard.

Copyright VCS Quality Services Private Limited – All rights reserved

Digitally signed by RACHNA SHUKLA
Date: 2025.03.13 12:53:14 IST

i. Personnel performing work within the area influenced by the high voltage system must wear electrically insulated footwear (e.g., rubber knee-boots) and insulating rubber or plastic gloves so that metal parts of the pipeline can be touched.

ii. During thunderstorms or whenever discharges are observed on insulators, all personnel must leave the area of the high voltage line and pipeline.

iii. Vehicles and equipment must be earth-connected. This should be affected by connecting an uninsulated cable or chain of adequate length to the underside of the vehicles/ equipment.

iv. To prevent electrical voltage in a non-buried section of the pipeline from rising to dangerous levels, the length of the pipeline sections that have been welded together before lowering must not exceed the length at which the maximum admissible voltage may be induced. This length may be calculated using an appropriate calculation method.

v. The welded connection between pipeline section yet to be lowered and section already buried must be at least 50 m from the nearest point of pylon base of a high voltage transmission line.

16.4 ADDITIONAL REQUIREMENTS WHEN WORKING AT LESS THAN 50 M FROM THE CENTRE OF THE HIGH VOLTAGE SYSTEM

When working at a distance less than 50 m from the center of a High Voltage system, following requirements shall be complied with.

i. The work must not be started until agreement has been reached with the authorities, who control the high voltage system, with regard to the safety measures to be adopted.

ii. Measures must be taken to prevent excavators and hoisting equipment from approaching high voltage lines within the following distances.

Voltage level	Radial distance
0- 50 kV	3 m
> 50 - 200 kV	5 m
> 200 - 380 kV	8 m

Measures to be taken in this regard may be as follows:

- Special selection of equipment, or limiting or blocking certain directions of movement, or limiting the operational area, thereby making it definitely impossible for any work to be done at a distance from the high voltage line of less than accepted minimum.

- In case the measures recommended above are not feasible, installation of clearly visible markers with no passage beyond this point' painted bright red and white must be done to prevent any work being done inside the danger area.

In the event that a vehicle, crane etc. should accidentally come into contact with a live line / conductor of a high voltage system or flash-over of electrical charge occurs, the driver must not get down from his vehicle because this will pose a serious threat to his life. The vehicle or crane must break the contact without any help from outside. The driver must not leave his vehicle until he has managed to leave the dangerous area, or alternatively, when the Electricity Authorities have given notice that the cable(s) have been put out of circuit. In case a serious fire starts in the vehicle, he is permitted to jump from the vehicle, clearing it as far

Copyright VCS Quality Services Private Limited – All rights reserved

Digitally signed by RACHNA SHUKLA
Date: 2025.03.13 12:53:14 IST

as possible, while the jump should be possible at a dry sport.

17. MARKER

The Contractor shall fabricate and install all types of pipeline markers along pipeline route. Number and type of pipeline markers shall be as per As-built survey/ alignment sheet & reference specification and as directed by the authorities having jurisdiction. The Contractor shall install all types of markers in accordance with Specification for Markers and approved for construction drawings.

18. FINAL CLEAN-UP OF THE CONSTRUCTION RIGHT-OF-USE (ROU)

18.1 Contractor shall restore the ROU and all sites used. for the construction of pipelines, water crossings and other structures in accordance with Company's instructions, and deliver them to the satisfaction of Company.

18.2 SURPLUS MATERIALS

For Company supplied materials, after completion of work, the Contractor shall return all surplus materials at Company's designated areas.

The reconciliation of surplus free issue line pipes shall be as per the requirement of commercial condition of contract.

18.3 DISPOSAL

18.3.1 All surplus and defective materials supplied by Contractor and all trash refuse and spoiled materials shall be collected and disposed of by Contractor.

18.3.2 The ROU shall be cleared of all rubbish, broken skids, empty cans, card board, sacks, stumps, trash, and leftover construction material. All burnable matter shall be burned, but only after obtaining appropriate permits for such burning. If burning is not allowed, Contractor shall haul the clean-up material to an approved dumping area. All scrap metal and unburnable material shall be disposed of, in an appropriate manner, but never be buried in the ROU.

18.3.3 Surplus soil can only be removed from the Owner's plot after authorization by Company.

18.3.4 All dumping fees and royalty connected with the disposal of materials shall be to the account of Contractor.

18.3.5 All loose stones and rock exposed by the construction operations and scattered over the ROU or adjacent grounds shall be removed by Contractor and be transported to a location considered suitable by the land-owner and/ or tenant, or by authorities have jurisdiction, for satisfactory disposal. For stones, gravel or other hard material, which may be buried in the trench the provisions of the specifications shall apply with the understanding that the use of the land by the land-owner and/ or tenant will not be interfered with.

18.4 TEMPORARY STRUCTURES

All auxiliary structures such as bridges, culverts, sheet piling, posts, signs, etc., which were erected or installed by Contractor as temporary measure, shall be removed. However, it may be necessary to remove the fence of ROU during the maintenance period.

18.5 REPAIR OF DAMAGES

Copyright VCS Quality Services Private Limited – All rights reserved

Digitally signed by RACHNA SHUKLA
Date: 2025.03.13 12:53:14 IST

18.5.1 Damages to roads, bridges, and private property shall be repaired by Contractor. All fences and other structures, which are damaged during construction, shall be restored to original.

18.5.2 Slopes, water course sides or banks which have been partially or totally demolished during the execution of the works shall be properly consolidated and restored (without waiting for their natural consolidation and setting) complying to requirement of the concern authorities. The bed of water-courses shall be restored to the original level. The banks and any excavated areas shall be restored to the original levels and contours. The banks shall also be stabilized.

18.5.3 All boundary stones, which have been moved or removed during the work, must be reset in their original location to the satisfaction of the landowner concerned.

18.5.4 On completion of clean-up, the ROU shall be restored to such stable and usable condition as may be reasonably consistent with the condition of the ROU prior to laying the pipeline. The Company shall be completely indemnified and held harmless by Contractor from any and against all claims, demands, losses, expenses etc. that may arise in this behalf or the Company may anyway suffer or sustain, relative to, arising out of, or in connection with same. The Company require from the Contractor signed releases from landowners regarding satisfactory indemnification and restoration of their lands.

18.5.5 Special precautions shall be taken near steep slopes prone to erosions and landslides. All necessary steps shall be taken to ensure the rapid growth of grass by providing wicker barriers and by regulating the drainage of surface waters.

18.5.6 All cadastral or geodetic markers, which may have been removed during the execution of the work, shall be restored in their exact position.

18.5.7 Ditches for which no instructions for their restoration have been issued, or restoration cannot be done due to absence of banks, shall be restored as instructed by Company. The bed of ditches crossed by the pipeline shall be cleaned over the full width of the ROU, also outside the ROU if necessary. This restoration might contain but is not limited to the supply and installation of proper materials for backfill and protection, the sodding or other precautions to prevent erosion or guarantee the stability. All work has to be done after deliberation and acceptance of the authorities and Company. Other field drains have to be restored over full width of ROU and if necessary, also outside the ROU by hand and/ or special equipment as soon as possible.

18.5.8 Any subsidence, cave-ins, wash-outs, which have been caused during the pipeline construction and maintenance, caused by whatever reason within the edge of ditches and open drains, shall be repaired by Contractor immediately or at first notice given by Company.

18.5.9 After the clean-up, the ROU of pastures has to remain fenced considered suitable by the tenant and to be removed during the maintenance period. When agricultural and other traffic (requested by tenant) have to cross the ROU the cross-over have to be fenced with the same material as the ROU. If necessary, special materials have to be used to allow traffic on the cross-over. Fencing of the right-of-use as specified shall not be removed until Contractor has obtained written permission by Company. In general, this has to be done during the maintenance period.

18.5.10 All openings in or damage to the fences or enclosures shall be repaired by installing new fencing of a quality, which shall be at least equal to the parts damaged or removed. Provisional gates shall be removed and replaced with new fencing. All repairs to fences and

Copyright VCS Quality Services Private Limited – All rights reserved

Digitally signed by RACHNA SHUKLA
Date: 2025.03.13 12:53:14 IST

enclosures shall be carried out by Contractor to the complete satisfaction of Company, landowner and/ or tenant.

18.5.11 If, in the opinion of Company, the sod in pasture land has been damaged by vehicles, and wheel tracks are visible, the ROU shall be tilled with a disc-harrow or rotary cultivator several times. The damaged sod shall be firmly cut up and thoroughly mixed through the top-soil. In general, the ROU has also to be ripped. After this procedure no closed-in layers must be found and sufficiently loose top-soil 25 to 30 cm thick must be present. The whole procedure must be approved by Company. Subsequently, the entire ROU, which is part of pasture land, shall be prepared for seeding and fertilized by Contractor according to the instructions of Company.

18.5.12 In crop fields the tillage shall consist of passing over the land several times with a disc harrow, cultivating with a spading machine, or plow, to a depth of approx. 20 cm. In general, the ROU has also to be ripped. After this cultivation process no closed-in layers must be found any more in the ROU. The equipment used and methods adopted shall require the approval of Company. Ripping has to be done with rippers with a distance of 50cm between the ripper blades. The type to be used shall be approved by Company.

18.5.13 Adequate numbers of saplings of any plant/ tree uprooted or cut during construction shall be planted along the route as per the direction of the Company and in accordance with the requirement of Authorities. The cost of sapling and its plantation shall be to Contractor's account.

The ROU and the backfilled trench in particular have to be finished in such a way that after settlement of the soil the fields are at their original level.

If during the maintenance period certain parts of the ROU are lower than the original level, Company can order Contractor to bring these parts to the original level.

In cases where heavy damage has occurred to the structure of the subsoil as a result of adverse circumstances, Company reserves the right to order Contractor to carry out special restoration work. Said special work can include:

- Spading with dragline (depth 30-80cm);
- Spading with dragline (depth 80-100cm);
- Fertilizing;
- Cover with sand.

If during clean-up operations, soil shortages become apparent outside the trench, Contractor shall supplement said soil shortage using suitable materials, approved by Company.

If site and/ or climatic conditions should render this necessary, Company shall have the right to order Contractor to suspend certain parts of the work related to the clean-up and postpone it to a later date.

18.6 SOIL SURPLUS

18.6.1 If on site, as a result of the work and after careful backfilling and compacting, a sub-soil surplus exists, this shall be worked up by grading and compacting below the sub-soil top layer and as a rule this shall be done in the same plot of land. It shall not be permitted to remove the surplus from the plot concerned, unless it concerns rejected soil, which has to be

Copyright VCS Quality Services Private Limited – All rights reserved

Digitally signed by RACHNA SHUKLA
Date: 2025.03.13 12:53:14 IST

removed. Working up surplus soil or removal of rejected soil shall be considered to pertain to the work.

18.6.2 To work a soil surplus into the ground, Contractor shall remove an additional strip of top soil beside the trench. Next, the upper layer of sub-soil shall also be removed. Both soil types shall be stored separately across the width depending on the size of the soil, surplus. The soil surplus shall then be distributed across the trench thus widened, after which it shall be graded and compacted and subsequently the top layer of sub-soil and the top-soil shall be replaced in the correct order, in accordance with the Specifications.

18.6.3 In case Company has given prior permission for mixed excavation of the sub-soil as well as in cases where Company deems mixed excavation permissible, the above provision of separate storage of the upper layer of sub- soil shall not apply to the working up to the soil surplus.

18.6.4 In cases where the soil surplus can be worked up in others plots where soil shortages have arisen due to the work, this shall only be done after prior permission by land-owner, land user and Company.

18.7 SOIL SHORTAGES

18.7.1 If due to unforeseen circumstances during backfilling and compacting there should not be enough soil to fill the trench properly, or to install the crown height as stipulated, Contractor shall supply the necessary backfill material.

18.7.2 Soil shortages shall be supplemented and applied before the top-soil is replaced.

18.7.3 The soil to be supplied shall be worked up in those locations and into those layers where a soil shortage has been established. The quality of the supplemented soil shall be equal to that of the shortage.

19. MAINTENANCE DURING DEFECTS LIABILITY PERIOD

Defects Liability Period as defined as period of liability in the Contract.

Company reserves the right to carry out instrumented pigging survey of the completed pipeline.

Contractor shall be responsible for making good with all possible speed at his expense any defect in or damage to any portion of the work which may appear or occur during the Defects Liability Period and which arises either:

a) From any defective material (other than supplied by Company), workmanship or design, (other than a design made, furnished or specified by Company and for which Contractor has disclaimed responsibility in writing), or
b) From any act or omission of Contractor done or omitted during the said period.

If such defect shall appear or damage occur, Company shall forthwith inform Contractor thereof stating in writing the nature of the defect or damage.

If any such defect or damage be not remedied within a reasonable time, Company may proceed to execute the work at Contractor's risk and expense provided that he does so in a reasonable manner. Such defect or damage can be, but is not limited to:

Copyright VCS Quality Services Private Limited – All rights reserved

Digitally signed by RACHNA SHUKLA
Date: 2025.03.13 12:53:14 IST

- Clean-up of ROU, including water courses.
- Sagging or sinking of site level or pipe supports.
- Sliding of ditch banks.
- Repair of fencing or removal of construction fencing.
- Repaving of pavements, repair of pavements and repair of Roads.
- Repair of coating, painting.
- Realigning markers, signs.
- Leak/ burst of pipe, leaking of flanges, washouts
- Short-circuit in casings

Construction defects such as dents, ovality, welding offsets/ defects, etc. detected during intelligent pigging survey, etc.

Company reserves the right to have the required Computerized Potential Logging Test executed during the Defects Liability Period and whenever weather conditions are more favorable for this job. The work shall (at or as soon as practicable after the expiration of the Defects Liability Period) be delivered to Company in the conditions required by the contractor, fair wear and tear excepted, to the satisfaction of Company. Contractor shall finish the work, if any outstanding, at the date of completion as soon as possible after such date and shall execute all such work.

Copyright VCS Quality Services Private Limited – All rights reserved

Digitally signed by RACHNA SHUKLA
Date: 2025.03.13 12:53:14 IST

ENERGISING QUALITY

VCS QUALITY SERVICES PVT. LTD.

STANDARD SPECIFICATION

FOR
CONSTRUCTION OF PIPELINE, CROSSING ROADS, RAIL ROADS & MINOR WATER CROSSING

VCS – SS – PP - 2002

Rev. No	Date	Prepared By	Checked By	Approved By	Authorized By
03	29.04.2022	RP	MC	HK	GW
02	04.01.2022	SR	MC	HK	HK

UNCONTROLLED COPY	:	If printed
CONTROLLED COPY	:	If in soft and signed

Copyright VCS Quality Services Private Limited – All rights reserved

Digitally signed by RACHNA SHUKLA
Date: 2025.03.13 12:53:14 IST

REVISION RECORD						
Rev.	**Revision Date**	**Prepared by**	**Checked by**	**Approved by**	**Authorized by**	**Revision Description**
00	23.06.2017	AS	SM	AD	SK	Issued as Standard Specification (Document formatting, Cover Page, Doc numbering updated from SS-PL-006 to VPC-SS-PL-0006 keeping Revision Number Same)
01	28.01.2020	MB	MC	AD	SK	Document numbering updated from VPC-SS-PL-0006 to VPC-SS-PP-2002
02	04.01.2022	SR	MC	HK	HK	Revised as marked
03	29.04.2022	RP	MC	HK	GW	VCS QMS Integration

Copyright VCS Quality Services Private Limited – All rights reserved

Digitally signed by RACHNA SHUKLA
Date: 2025.03.13 12:53:14 IST

ABBREVIATIONS:

ASME	American Society of Mechanical Engineers
ASTM	American Society of Testing of Materials
API	American Petroleum Institute
OISD	Oil Industry Safety Directorate

Copyright VCS Quality Services Private Limited – All rights reserved

Digitally signed by RACHNA SHUKLA
Date: 2025.03.13 12:53:14 IST

CONTENTS

1.0 SCOPE 5

2.0 REFERENCE CODES, STANDARDS AND SPECIFICATIONS 5

3.0 GENERAL 6

4.0 ROAD AND RAILROAD CROSSINGS 8

5.0 MINOR WATER COURSE CROSSINGS 11

6.0 CROSSING OF BURIED SERVICES 13

Copyright VCS Quality Services Private Limited – All rights reserved

Digitally signed by RACHNA SHUKLA
Date: 2025.03.13 12:53:14 IST

1.0 SCOPE

This specification covers the minimum requirements for the various activities to be carried out by the Contractor for or about installation of pipelines crossing roads, railroads, minor water courses and other services.

The provision of this specification is not applicable for pipelines crossing water courses, which are specifically designated as "Major water Courses" in the CONTRACT.

This provision is formulated to protect the facilities crossed by the pipeline as well as to provide adequate design for installation and operation of pipeline.

Requirements related to installation of pipeline crossing including, but not limited to site preparation, supply of materials, string fabrication, joint coating application, boring / jacking, testing, tie-in, clean-up, restoration and as-built drawing are addressed in this specification.

2.0 REFERENCE CODES, STANDARDS AND SPECIFICATIONS

Reference has been made in this specification to the latest edition (edition in force at the time of floating the enquiry) of the following codes, standards and specifications.

AMERICAN SOCIETY OF MECHANICAL ENGINEERS (ASME)

B31.4	:	Pipeline Transportation system for liquid Hydrocarbon & other liquids.
B31.8	:	Gas Transmission and Distribution Piping Systems.

AMERICAN PETROLEUM INSTITUTE (API)

API RP 1102	:	Recommended practice for liquid Petroleum Pipeline Crossing Railroads and Highway

PNGRB REGULATIONS:

G.S.R 808(E) T4S : Regulations for Natural Gas Pipelines

G.S.R. Infra/ T4S/ P&PPPL : Regulations for Petroleum and Petroleum products pipelines

G.S.R. 612(E) T4S : Regulations for CGD Network

SPECIFICATIONS

VPC-SS-PP-2001	:	Standards Specification for pipeline construction (onshore)
VPC-SS-PP-2014	:	Specification for Hydrostatic Testing of Onshore Pipeline.

Copyright VCS Quality Services Private Limited – All rights reserved

Digitally signed by RACHNA SHUKLA
Date: 2025.03.13 12:53:14 IST

2.1 In case of conflict between the requirements of above mentioned codes, standards, regulations, specifications and practices, the most stringent requirement shall govern. For the purpose of this specification the following definitions shall hold:

- Words 'Shall' and 'Must' where used indicate that a provision is mandatory.
- Words 'Should' and `Will' where used indicate that a provision is not mandatory but is recommended as good practice.

3.0 GENERAL

3.1 Crossing of roads, railroads, buried services, canals and minor water courses with equipment and/ or personnel is allowed only after acquiring approval from the authorities having jurisdiction and after making arrangements for safeguarding the roads, etc. and the verges and/ or banks thereof and the buried services with appropriate provisions.

The carrier pipe shall be firmly supported on both sides of the crossing. The bottom of trench and pit for at least 12 m length at approaches to crossing shall be graded and filled with soil compacted up to 95% Proctor density to an elevation that will provide sufficient continuous support to the carrier pipe. Earth or sand filled bags may be used to firmly support the carrier pipe adjacent to the crossing. In case of cased crossing, carrier pipe shall be supported in such a manner that it remains correctly aligned at the casing ends during and after backfilling.

Highways, Main-Roads and Railroads and their verges and banks of water crossings are not allowed to be used for loading, unloading or stacking of materials and/ or equipment. For secondary roads, such loading/ unloading is permitted only after prior approval from the concerned authorities. Contractor is not allowed to close or divert roads or watercourses without prior approval from the company and the concerned authorities. Contractor shall never unnecessarily hamper the users of the roads, railroads, buried services and/ or watercourses. The water flow shall not be obstructed in any way.

3.2 Contractor shall submit the followings before start of any crossing works:

- Approval letter from concerned authorities
- Time Schedule
- Execution methodology with details of equipment
- Test procedure
- Manpower deployment
- Description of temporary works
- Design calculations for crossing (if any)
- Soil investigations etc.
- Construction drawings

Such works shall be without any extra cost to company.

3.3 SURVEYS AND INVESTIGATIONS

The Company may carry out surveys and soil investigations along pipeline route including crossing locations. The details of the surveys, soil investigations and other data collected

Copyright VCS Quality Services Private Limited – All rights reserved

Digitally signed by RACHNA SHUKLA
Date: 2025.03.13 12:53:14 IST

by the Company shall be presented in the drawings and documents enclosed with the Contract for the information of the Contractor.

The Contractor shall be deemed to have reviewed and satisfied himself with regard to the details provided in the Contract. It shall be the responsibility of the Contractor to assess requirement of any additional surveys and/ or soil investigations or any other data collection that may be deemed necessary for proper execution of the works in accordance with the drawings, specifications, other requirements of the Contract including requirements of concerned Authorities.

The Contractor shall be responsible for carrying out survey, soil investigation and data collection, as deemed necessary by the Contractor, for proper execution of the works. The Company shall not provide any additional details in this regard.

Whenever specified in the contract, contractor shall carryout all geotechnical investigation and Hydrological, scour calculate in case of water

3.4 PROTECTION OF UNDERGROUND UTILITIES

Contractor shall ensure that the crossing is not interfering with any of the existing underground utilities. Should any damage to any utility/ structure occur, the Owner/ Authority concerned shall be contacted by the Contractor and repair shall be carried out by the Contractor to entire satisfaction of the Owner/ Authority. All costs for reinstatement or incidental to reinstatement shall be settled and paid by the Contractor.

3.5 MINIMUM COVER REQUIREMENT

Within the limits of bored crossings, unless noted otherwise on the Contract drawings, minimum requirements of cover indicated in Table-1 shall be satisfied.

Table 1 – Minimum Cover Requirements for Crossings

Utility Crossed	Minimum Cover
National Highways and Expressways	1.2 m from top of road to top of pipe
State Highways	1.2 m from top of road to top of pipe
Railroads	1.7 m from base of rail to top of pipe
Canal (Lined / Unlined)	1.5 m below the canal bed level
River	2.5 m (below scour depth/ Lowest bed level)
	1.5 m in case of rocky strata

In case any additional cover over and above the above minimum cover is stipulated by the Authorities, the Contractor shall ensure compliance with the requirements of the Authorities.

3.6 HYDROSTATIC TESTING

Pipeline crossings for road, railroad, canals and rivers etc., shall be hydrostatically pretested ex situ, prior to joint coating, whenever,

- Crossing is executed by boring of carrier pipe
- Casing pipe used in crossing installation

Copyright VCS Quality Services Private Limited – All rights reserved

Digitally signed by RACHNA SHUKLA
Date: 2025.03.13 12:53:14 IST

- River Crossing pipes which are to be continuously concrete weight coated (to be tested prior to concrete coating).
- Whenever, in company's opinion, the repair of pipeline at crossing, in case of a leak during final hydrostatic testing, would require inordinate number of efforts and/ or time
- Whenever pretesting is insisted upon by the Authorities having jurisdiction over the utility crossed.

The pipeline shall be hydrostatically tested to a minimum test pressure equal to 1.25 / 1.5 times the design pressure as applicable. The combined equivalent stress in the pipeline due to bending and test pressure shall not exceed 95% of the SMYS of pipe material. Test pressure shall be retained in the pipeline for minimum period of 2 hours. Test section shall be visually examined for leaks/ defects, etc.

4.0 ROAD AND RAILROAD CROSSINGS

4.1 The work under crossings shall include necessary clearing, grading and trenching to required depths and widths, welding of casing and carrier pipes, lowering-in, back filling, clean-up, restoration to the original condition and further strengthening and protective works, testing, installation of assemblies, insulators and seals, and temporary works such as sheet piling, bridges etc.

The work shall be carried out in accordance with the approved drawings and job standards, as directed by Company and to the satisfaction of Company and the authorities having jurisdiction over the facility crossed. The work carried out for road and railroad crossings shall meet the minimum requirements of API RP 1102.

Prior approval from the statutory authorities shall be obtained to lay the pipeline across the highway/ road either by boring or by open-cut- method. Installation of the crossing shall be by the method (i.e., boring/ open-cut) approved by Authorities having jurisdiction. Railroad crossings shall always be bored/ .

Before the installation work of crossings is started, the Contractor shall provide suitable barricades, temporary bridge/ bypass work (especially where roads are open cut) with railing, if required by Company for safety of traffic. Adequate traffic warning signals and/ or traffic lights and suitable diversions shall be provided as directed by Company/ Authority having jurisdiction over these areas. Such diversions shall not cross the pipeline where it has already been installed, unless proper safeguarding at Company opinion is ensured.

4.2 Boring/ jacking of carrier pipes for crossings is allowed only if the pipes for boring/ jacking are provided with a suitable corrosion coating and Contractor remains liable for the suitability of the pipe and weld coating of carrier pipes to be bored and type of coating and method of application are anyhow to be authorized by Company without prejudice to Contractor's liability. In all other cases the carrier pipes shall be cased.

Before start of the boring/ jacking, Contractor shall execute a soil investigation and determine the ground water table. Based on these investigations Contractor shall prepare

a construction drawing and submit to Company for approval including time schedule and soil investigation report.

Copyright VCS Quality Services Private Limited – All rights reserved

Digitally signed by RACHNA SHUKLA
Date: 2025.03.13 12:53:14 IST

During the execution of the boring, the ground water table over the length of the boring shall be lowered up to at least 0.50 M below bottom of the pipeline. This water table is to be regularly inspected and maintained by Contractor and reported to Company to safeguard the stability of the bore pit. Contractor shall, if necessary, in Company opinion, use a closed sheet piling, which shall extend at least over 50% of the length in undisturbed soil. The length of the boring shall be in accordance with the width of the ROU of the crossing (road, railroad, etc.) with minimum 0.6 M extra on either side.

In approaches to the crossing, Contractor shall eliminate unnecessary bending of pipe by conforming to the contour of the ground by gradually deepening the ditch at such approaches as directed by the Company.

4.3 The diameter of the hole for a bored section shall have a hole diameter as close as practicable to the outside diameter of the carrier or casing pipe. If excessive void or too large hole results, or if it is necessary, in the opinion of Company, to abandon the bored hole, prompt remedial measures such as filling the hole with suitable material shall be taken to the entire satisfaction of the Company and Authorities having jurisdiction thereof at no extra cost to Company. Equipment used for installation of casing pipe shall be of the type approved by Company.

An installation consisting of hydraulic jacks shall be provided with easily readable pressure gauge (in bar) and sealable pressure limits. Their proper operation shall be demonstrated before the work is started. Company can request that the maximum pressing force be limited.

At the front of the pipe there may be a cutting ring which may be 12 MM larger than the outside diameter of the pipe or casing. A lubricating pipe can also be used in jacking, the nipples of which shall not protrude from the cutting ring. Said lubricating pipe shall not be fixed to the pipe or casing. When jacking, only biologically degradable lubricants shall be used.

The progress in the work, the readings of the gauge pipes, the jacking pressures observed, etc., shall be recorded in a log book, to be shown to Company upon request. All information shall be supplied to Company on completion of the work.

In case of jacking failure e.g., resulting in pipe buckling or the equipment being unable to push the pipe further, the pipe shall be left in the hole, filled with sand and plugged at both ends. Cost of pipe lost due to such failure shall be borne by the Contractor.

Company reserves the right to inspect certain lengths of pipes to assess damages, if any, to the corrosion coating of the carrier pipe used for boring. Contractor shall weld additional lengths of pipe and pull the required extra lengths for Company's inspection. If during inspection any defects are noticed, Contractor, in consultation with Company, shall carry out the remedial measures required.

4.4 After completion of the pipe laying, the trench shall be properly compacted by mechanical compactors to the satisfaction of the Authorities and restored back to the original.

While welding of the casing and vent/ drain pipes, internal high or low is not allowed. Welding of casing and vent/ drain pipes need not be radiographed; however, only normal

Copyright VCS Quality Services Private Limited – All rights reserved

Digitally signed by RACHNA SHUKLA
Date: 2025.03.13 12:53:14 IST

visual checks shall be carried out. Before welding, the single length of pipe shall be inspected in order to check that there is no out of roundness and dents. When such defects are noticed, these must be completely removed before joining the pipes. If these defects cannot be repaired, the defective section shall be cut out.

4.5 In the case of crossings where excavation has been authorized, the welding for the casing pipe and for a continuous section of the pipeline corresponding to the expected length shall be carried out in the proximity of the crossing. Casing must be laid immediately after the trenching. Casing pipe must be laid with a single gradient in order to allow for an easy insertion.

4.6 The assembly of vent pipe units as approved by Company shall be carried out by direct insertion and welding to the ends of the casing pipe before introducing the carrier pipe to avoid damage to insulators from welding heat. The operation of assembling and extending the vent pipe shall be carried out in such a way that there is no contact with the carrier pipe. The painting/ coating of the vent pipes shall be applied before backfilling as per relevant specifications.

4.7 Before installation of carrier pipe, the casing pipe shall be thoroughly cleaned to remove soil, mud, stones and other foreign material. A nose-piece having a diameter equal to that of the pipe shall be welded to the front end of the carrier pipe to facilitate correct installation of the carrier pipe in the casing. Pushing or pulling force is evenly and constantly applied to avoid damage to the insulators.

4.8 Insulators, as per specification as approved by Company, shall be securely fastened to the pipe with all bolts and fixtures firmly tightened. The number of insulators and spacing shall-be as shown in Standard drawing No VCS-STD-2009 or 2.5 meters center (whichever is more stringent). At the end of both sides of the casing, a double set of insulators shall be installed.

4.9 Care must be taken in pushing or pulling carrier pipe into the casing so that the pipe is aligned correctly in the casing and that the pushing or pulling force is evenly and constantly applied to avoid damages to the insulators. A nose piece having a diameter equal to that of the pipe shall be welded on the front and back end of the carrier pipe to facilitate installation of the carrier pipe properly in the casing and to keep it dry and clean.

4.10 In the event of failure, the pipe/ section removed from the installed pipeline shall be kept aside and preserved for further investigation of the reasons for failure.

After successful testing the ends of the pipeline section shall be capped and buried unless immediate tie-in is carried out. The location of the ends shall be marked on ground by installing markers.

4.11 After installation of the carrier pipe section, the casing and the appurtenances, but prior to making tie-in welds and backfilling, an electrical test shall be conducted by the Contractor in the presence of the Company, to determine the resistance between the casing and the carrier pipe or the carrier pipe and the soil. These tests shall show at least a resistance of 100,000 ohm M^2. After backfilling and compaction, additional tests shall be conducted to determine if the casing is electrically shorted to the pipe. If the installation is found to be shorted, Contractor shall make the necessary corrections and repairs at his cost, unless a test to the satisfaction of the Company is obtained.

Copyright VCS Quality Services Private Limited – All rights reserved

Digitally signed by RACHNA SHUKLA
Date: 2025.03.13 12:53:14 IST

In case of failure of test, the Contractor shall assess the reasons for lower resistance and if it is established that casing and carrier pipe are electrically short circuited, the Contractor shall make the necessary repairs and verify that short circuiting has been successfully removed.

5.0 MINOR WATER COURSE CROSSINGS

5.1 Minor water crossings are crossings of (future) ditches, canals, water courses, rivers, streams etc. whether the bed(s) contain(s) water or not, and not being specified as "Major Water Crossings" in the CONTRACT.

5.2 For minor water crossings a standard drawing or a separate detailed approved drawing for individual crossing shall be applicable, and all further specifications are applicable.

5.3 Whenever minor water crossings in the ROU are to be crossed, Contractor shall install bridges and further comply with the provisions as laid down in this specification.

5.4 In crossings of water courses with either moderate flow rate or of torrential nature with marked and unpredictable flooding, an adequate survey shall be carried out before starting the work with the object of determining what precautions are necessary and the most favorable period for executing the work.

5.5 In case of crossings of water courses for which no special methods of laying are required, a pipe section of a size as per the approved drawings shall be assembled and subsequently laid. Bends shall be of cold field type.

The depth of the existing bottom of a minor water course crossing shall be determined in relation to the adjacent ground level by taking the average of four measurements. Measurements shall be taken with a gauge rod having a flat bottom. The minimum force to be exerted shall be 360N (36kgf).

Contractor shall take special care to check with the responsible authorities for special conditions applying to working on, over, under or thorough minor water crossings and Contractor shall comply with any such conditions. Written arrangements with authorities shall be drawn up in cooperation with Company.

5.6 Whenever required by Company, Contractor shall, before start of construction, execute a geo-technical and hydrological investigation. Based on these investigations Contractor shall also calculate scour level and prepare construction drawings, Contractor shall submit all reports, calculations and drawings for approval by Company.

5.7 The minimum cover over the pipe shall be as specified in the relevant approved drawings and job standard.

5.8 For crossing beneath the bed of water courses, the pipe section shall be made in such a way that it conforms to the existing or future bed as indicated in the approved drawings. In crossings for which an individual drawing has not been prepared, the minimum cover of the pipeline shall not be less than that indicated in- the standard drawings for a similar type. of crossing.

5.9 Whenever the crossing requires a straight section of pipe between the lower bends coinciding with the river bed, this section shall be laid at a single horizontal level.

Copyright VCS Quality Services Private Limited – All rights reserved

Digitally signed by RACHNA SHUKLA
Date: 2025.03.13 12:53:14 IST

5.10 For crossing of ditches, canals, banked channels, etc. by boring, the pipe section shall be prepared, laid and tested in accordance with the applicable clauses of Section 4.0 of this specification.

5.11 The Contractor shall arrange temporary installation of diversions as may be necessary, to ensure the effective functioning of these watercourses crossed, to the entire satisfaction of the concerned local Authorities as well as the Company.

5.12 Banks and trenches of minor water crossings shall be backfilled with soil which is to be approved by Company and shall be thoroughly compacted to prevent soil and bank erosion as per the drawings and standards to the satisfaction of authorities having jurisdiction thereof and the Company. Whenever boulders, rock, gravel and other hard objects are encountered, they shall not be placed directly on the pipe. Sufficient earth, sand or selected and approved backfill material shall be backfilled initially around and over the pipe to provide a protective padding or cushion extending to a minimum thickness of 30 centimeters around the pipe before backfilling remainder of the trench with excavated or other material as per approved drawings and standards.

After the trench has been backfilled and during the clean up works, the minor water crossing shall be cleaned at least across the whole width of the ROU.

When specified in the CONTRACT, Contractor shall repair the ditch bank with materials to be supplied by himself as follows:

The excavation shall be backfilled with well compacted solid soil, followed by a minimum 0.25 M thick layer of properly shaped boulders (75-150 MM) encased in a net of galvanized iron wire of dia 3 MM spaced at a maximum distance of 50 MM to be laid over the backfilled, compacted and graded banks.

The width of the above protection shall be equal to the bank excavated and damage and extending 3 M on either side. The length of this protection on the slope shall be determined by the following:

- 2 M plus the highest water level.
- Up to the bottom of the crossing or 20 M below the highest water level whichever is smaller.

5.13 After completion of crossing, any temporary arrangements made for diversion flowing water shall be restored back to the original.

Where possible a gradual slope to the pipe shall be given on both sides to avoid use of sag bend at the crossing. Otherwise, single pipe sag bend suitable for each nala / stream shall be prepared by field cold bending and installed at the crossing.

5.14 The crossing of any embankments shall be carried out strictly in accordance with approved drawings.

No drilling work on embankments shall be permitted without prior written approval from the competent Authorities.

Copyright VCS Quality Services Private Limited – All rights reserved

Digitally signed by RACHNA SHUKLA
Date: 2025.03.13 12:53:14 IST

6.0 CROSSING OF BURIED SERVICES

6.1 The pipeline under construction may pass above or below the existing buried facilities such as pipelines, cables, etc. Type of crossing shall be such that a minimum depth of cover as required in the drawings and specifications are guaranteed. The minimum clearance required between pipeline and the existing facility shall be 500 MM as per job standard.

6.2 Whenever buried services in the ROU are to be crossed by Contractor, Contractor shall safeguard the buried facilities and the required protecting precaution shall be executed as approved by Company of the buried services and by Company.

Copyright VCS Quality Services Private Limited – All rights reserved

Digitally signed by RACHNA SHUKLA
Date: 2025.03.13 12:53:14 IST

VCS QUALITY SERVICES PVT.LTD.

STANDARD SPECIFICATION
FOR
PIPELINE BALL VALVES

VCS-SS-PP-2004

Rev. No	Date	Prepared By	Checked By	Approved By	Authorized By
04	29.04.2022	RP	MC	HK	GW
03	07.01.2022	SR	MC	HK	HK

UNCONTROLLED COPY	:	If printed
CONTROLLED COPY	:	If in soft and signed

Copyright VCS Quality Services Private Limited – All rights reserved

Digitally signed by RACHNA SHUKLA
Date: 2025.03.13 12:53:14 IST

REVISION RECORD						
Rev.	**Revision Date**	**Prepared by**	**Checked by**	**Approved by**	**Authorized by**	**Revision Description**
00	23.06.2017					Issued as Standard
		AS	SM	AD	SK	
01	22.05.2019					Revised based on API 6D 24TH Edition.
		BS	MC	AD	SK	
02	28.01.2020					Documents Formatting, numbering updated from SS-PL-004 to VPC-SS-PP-2004, vent drain Diagram updated, other Detail updated as marked
		MB	MC	AD	SK	
03	07.01.2022					Revised as Marked
		SR	MC	HK	HK	
04	29.04.2022					VCS QMS Integration
		RP	MC	HK	GW	

Copyright VCS Quality Services Private Limited – All rights reserved

Digitally signed by RACHNA SHUKLA
Date: 2025.03.13 12:53:14 IST

ABBREVIATIONS:

ASME	American Society of Mechanical Engineers
ASTM	American Society for Testing and Materials
API	American Petroleum Institute
BHN	Brinell Hardness Number
DN	Nominal Size
HAZ	Heat Affected Zone
LC	Lock Close (valve locked in full close position)
LO	Lock Open (valve locked in full open position)
MSS-SP	Manufacturers Standardization Society - Standard Practice
NDT	Non Destructive Testing
NPS	Nominal Pipe Size
RTJ	Ring Type Joint
SSPC	Steel Structures Painting Council
MPI	Magnetic Particle Inspection
DP	Dye Penetrant

Copyright VCS Quality Services Private Limited – All rights reserved

Digitally signed by RACHNA SHUKLA
Date: 2025.03.13 12:53:14 IST

CONTENTS

1 SCOPE 5
2 REFERENCE DOCUMENTS 5
3 MATERIALS 6
4 DESIGN AND CONSTRUCTION REQUIREMENTS 7
5 INSPECTION & TESTS 13
6 TEST CERTIFICATES 16
7 PAINTING 16
8 MARKING & SHIPMENT 16
9 SPARES & ACCESSORIES 17
10 DOCUMENTATION 17

Copyright VCS Quality Services Private Limited – All rights reserved

Digitally signed by RACHNA SHUKLA
Date: 2025.03.13 12:53:14 IST

1 SCOPE

This specification covers the minimum requirements for design, manufacture, testing and supply of carbon steel ball valves of size DN 50 mm (2") and above and ASME pressure rating Class 150# thru 900# for use in onshore pipeline systems handling non-sour hydrocarbons in liquid or gaseous phase including Liquefied Petroleum Gas (LPG).

2 REFERENCE DOCUMENTS

All valves shall be manufactured and supplied in accordance with the American Petroleum Institute (API) Specification 6D, latest edition (edition in force at the time of issue of enquiry), Specification for Pipeline and Piping Valves, with additions and modifications as indicated in the following sections of this specification.

Reference has also been made in this specification to the latest edition (edition in force at the time of issue of enquiry) of the following Codes, Standards and Specifications.

2.1 American Society of Mechanical Engineers (ASME)

B31.3	:	Process Piping.
B31.4	:	Pipeline Transportation System for Liquid and Slurries.
B 31.8	:	Gas Transmission and Distribution Piping Systems.
B16.5	:	Pipe Flanges and Flanged Fittings.
B16.10	:	Face to Face and End to End Dimensions of Valves.
B 16.25	:	Butt Welding Ends.
B 16.34	:	Valves-Flanged, Threaded and Welding Ends.
B 16.47	:	Large Diameter Steel Flanges.
Section VIII	:	Boiler and Pressure Vessel Code - Rules for Construction of Pressure Vessels.
Section IX	:	Welding and Brazing Qualifications.

2.2 American Petroleum Institute (API)

1104	:	Specification for Welding of Pipelines and Related Facilities.

2.3 American Society for Testing and Materials (ASTM)

A370	:	Standard Test Methods and Definitions for Mechanical Testing of Steel Products.
B 733	:	Auto catalytic (Electro less) Nickel - Phosphorus Coatings on Metal.

Copyright VCS Quality Services Private Limited – All rights reserved

Digitally signed by RACHNA SHUKLA
Date: 2025.03.13 12:53:14 IST

2.4 Manufacturers Standardization Society (MSS)

SP-6	:	Standard Finishes for contact faces of Pipe Flanges and Connecting – End Flanges of Valves and Fittings.
SP-44	:	Steel Pipeline Flanges.

2.5 Steel Structures Painting Council (SSPC)

SSPC-VIS-I	:	Steel Structures Painting Council Visual Standard-Guide and Reference Photographs for Steel Surfaces prepared by Dry Abrasive Blast Cleaning.

2.6 In case of conflict between the requirements of this specification, API 6D and the Codes, Standards and Specifications referred above, the requirements of this specification shall govern.

3 MATERIALS

3.1 The material of major components of the ball valves shall be as indicated in Valve Data Sheet. Remaining components shall be as per Manufacturer's standard (suitable for the service indicated in the data Sheet) and shall be subjected to approval by Company. In addition, the material shall also meet the requirement specified hereinafter.

All process-wetted parts, metallic and non-metallic, sealant and lubricants shall be suitable for the service specified by the Company. Manufacturer shall confirm that all wetted parts are suitable for treated water/ seawater environment, which may be used during field testing.

Non-metallic parts of the valves (including O-rings, soft seals etc.) intended for hydrocarbon gas service shall be resistant to explosive decompression.

3.2 Carbon steel used for the manufacture of valves shall be fully killed.

3.3 The carbon equivalent (CE_{IIW}) of valve end connections which are subject to further field welding by Company shall not exceed 0.43 on check analysis for each heat of steel used, as calculated by the following formula:

$$CE_{IIW} = C + \frac{Mn}{6} + \frac{Cr + Mo + V}{5} + \frac{Cu + Ni}{15}$$

3.4 Charpy V-Notch Test Requirements

Charpy V-notch test on each heat of base material shall be conducted for all pressure containing parts such as Body, End Flanges, Stem and Welding Ends as well as Bolting materials for pressure containing parts.

Test procedure for Charpy V-Notch Test shall conform to ASTM A370.

For Carbon Steel, alloy steel & Stainless Steel (except Austenitic Grades) Materials, The impact test temperature shall be 0 °C or minimum design temperature indicated in valve

Copyright VCS Quality Services Private Limited – All rights reserved

Digitally signed by RACHNA SHUKLA
Date: 2025.03.13 12:53:14 IST

data sheet / MR, whichever is lower. The average absorbed energy value of three full sized specimens shall be 27 J (for materials with Specified Minimum Tensile Strength ≤100,000 psi)/ 34 J (for materials with Specified Minimum Tensile Strength >100,000 psi). The minimum impact energy value of any one specimen of the three specimens analysed as above, shall not be less than 22 J (for materials with Specified Minimum Tensile Strength ≤100,000 psi)/ 26 J (for materials with Specified Minimum Tensile Strength >100,000 psi).

For Low Temperature Carbon Steel Materials, the impact test temperature shall be as per requirement of Material Standard or minimum design temperature indicated in valve data sheet/MR, whichever is lower. The average absorbed energy value of three full sized specimens shall be 27 J (for materials with Specified Minimum Tensile Strength ≤100,000 psi)/ 34 J (for materials with Specified Minimum Tensile Strength >100,000 psi). The minimum impact energy value of any one specimen of the three specimens analysed as above, shall not be less than 22 J (for materials with Specified Minimum Tensile Strength ≤100,000 psi)/ 26 J (for materials with Specified Minimum Tensile Strength >100,000 psi).

Where the material specification requires impact values to be higher than specified in the above paragraphs, the higher values shall apply.

For duplex & super duplex stainless steel the Charpy V-Notch test values and test temperature shall be as per API 6D.

3.5 Hardness Test Requirements

For valves specified to be used for Gas service or LPG service, Hardness test shall be carried out as per ASTM A370 for each method of manufacture and each heat of steel used in the manufacture of valves. A full thickness cross section shall be taken for this purpose and the maximum hardness of the materials of valve components shall not exceed 248 HV_{10}.

3.6 Electroless Nickel Plating Requirements

For all such valves where Carbon Steel/Low temperature carbon steel is used as ball material, the ball shall have 75 micrometers (0.003 inches) thick Electro less Nickel Plating (ENP) as per ASTM B 733 with following classification:

- SC2, Type II, Class 2.

The hardness of plating shall be minimum 50 RC.

4 DESIGN AND CONSTRUCTION REQUIREMENTS

4.1 General

Valve design shall meet the requirements of API Specification 6D and shall be suitable for the service conditions indicated in the Valve Data Sheet. The ASME Boiler & Pressure Vessel Code, Section VIII, Div 1 shall be used to design the valve body. Allowable stress requirements shall comply the provisions of above code. Also, corrosion allowance indicated in Valve Data Sheet shall be considered in valve design; however, the minimum wall thickness shall not be less than the minimum requirement of ASME B16.34. The

Copyright VCS Quality Services Private Limited – All rights reserved

Digitally signed by RACHNA SHUKLA
Date: 2025.03.13 12:53:14 IST

manufacturer shall have valid license to use API monogram on valves manufactured as per API 6D.

4.2 Valve Installation

Valves shall be suitable for either buried or above ground installation as indicated in Valve Data Sheet/ Material requisition.

4.3 Valve Body

4.3.1 For above ground valve, valve body design shall be either fully welded or bolted type. For buried valves, valve body design shall be fully welded type only. Valve body joints with threads are not permitted.

4.3.2 Ball mounting shall be trunnion or pivot type only. Valve design shall minimize the possibility of debris ingress into the trunnion as far as practicable

4.4 Ball

Ball shall be of single piece, solid type construction.

4.5 Valve Bore Configuration

Valves shall be Full bore (FB) or Reduced bore (RB) as indicated in the Valve Data Sheet.

Full Opening Valve

Full bore valves shall be suitable for the passage of all types of pipeline pigs including instrumented intelligent pigs and regular cleaning, batching and scraper pigs on regular basis without causing damage to either the valve component or the pig. The full bore, valve shall provide an unobstructed profile for pigging operations in either direction. Full bore valves shall be designed to minimize accumulation of debris in the seat ring region to ensure that valve movement is not impeded. The bore of full bore butt-welded & flanged valves shall be in line with Connecting pipe as stated in valve data sheet or Valve MR, however in any case it shall not be less than the minimum required shown in Client Ball Valve specification & API 6D.

Reduced Opening Valve

The bore size of reduced bore valve shall correspond to that of a full-bore valve of smaller nominal diameter as indicated in Table- 4.5 below. For sizes of a particular rating not covered in API 6D, the bore size of the reduced bore valve shall be as per manufacturer`s Standard.

TABLE – 4.5

Nominal Valve Size	Nominal Valve Size for Reduced Bore	Nominal Valve Size	Nominal Valve Size for Reduced Bore
DN mm (NPS inches)	DN mm (NPS inches)	DNmm (NPSinches)	DNmm (NPS inches)
50 (2)	40 (1.5)	600 (24)	500 (20)

Copyright VCS Quality Services Private Limited – All rights reserved

Digitally signed by RACHNA SHUKLA
Date: 2025.03.13 12:53:14 IST

80 (3)	50 (2)	650 (26)	550 (22)
100 (4)	80 (3)	700 (28)	600 (24)
150 (6)	100 (4)	750 (30)	600 (24)
200 (8)	150 (6)	800 (32)	650 (26)
250 (10)	200 (8)	850 (34)	700 (28)
300 (12)	250 (10)	900 (36)	750 (30)
350 (14)	250(10)	950 (38)	800 (32)
400 (16)	300 (12)	1000 (40)	850 (34)
450 (18)	350 (14)	1050 (42)	900 (36)
500 (20)	400 (16)	1200 (48)	1050 (42)
550 (22)	450 (18)		

4.6 Seat Design

The valves shall either be a soft seated valve or metal seated valve or with primary metal-to metal contact and secondary soft seats or seat design shall be as indicated in valve data sheet.

For soft seated valves, Metal seat rings may be provided with soft insert. The same shall be positively locked in position in Metal seat rings.

For valves with primary metal to metal contact and secondary soft seats, O-rings or other seals if used for drip tight sealing shall be encased in a suitable groove in such a manner that it cannot be removed from seat ring and there is no extrusion during opening or closing operation of valve at maximum differential pressure corresponding to valve class rating. The seat rings shall be so designed as to ensure sealing at low as well as high differential pressures.

4.7 Valves shall be designed to withstand a sustained internal vacuum of at least 1 (one) mille-bar in both open and closed positions.

4.8 Double Block & Bleed Design

Valves shall have double block and bleed feature to facilitate complete flush, drain and venting of the valve body cavity. Cavity relief pressure shall be as per API 6D.

4.9 Sealant Injection

Full bore valves of nominal valve size DN 200 mm (8") & above and Reduced Bore valves of nominal valve size DN 250 mm (10") & above, shall have provision for secondary sealant injection under full line pressure for seat and stem seals. All sealant injection connections shall be provided with block valve and an internal non-return valve. Valve design shall have a provision to replace the sealant injection fitting under full line pressure. Location and arrangement of sealant points shall be as per Fig 4.9.

4.10 Vent & Drain

Valves shall be provided with vent and drain connections. Location and arrangement of

Copyright VCS Quality Services Private Limited – All rights reserved

Digitally signed by RACHNA SHUKLA
Date: 2025.03.13 12:53:14 IST

vents and drains shall be as per Fig. 4.9. Body vent and drain shall be provided with valves (Ball or Plug type). Number and size shall be as per Fig. 4.9.

Valve design shall ensure repair of stem seals/ packing under full line pressure.

4.11 Support Foot

Full bore valves of nominal valve size DN 200 mm (8") & above and Reduced bore valves of nominal valve size DN 250 mm (10") & above, shall be equipped with support foot and lifting lugs unless specified otherwise. Tapped holes and eyebolts shall not be used for lifting lugs. Height of support foot shall be kept minimum. The location and size of support foot/ lifting lugs shall ensure unrestrictive operation of vent/ drain valves. The design of support foot shall be such that it shall take minimum double the weight of the valve assembly.

4.12 Valve design shall be such as to avoid bimetallic corrosion between carbon steel and high alloy steel components. Suitable insulation shall be provided as required.

4.13 The valve body cavity over-pressure shall be prevented by self-relieving seat rings/ assemblies. Valve Cavity relief pressure when added to the valve pressure rating shall not exceed 133% of the pressure rating of the valve at its maximum specified design temperature.

4.14 Valve Ends

Valve ends shall be either flanged/ or butt welded or one end flanged and one end butt welded as indicated in the Valve Data Sheet. Flanges of the flanged end cast/ forged body valves shall be integrally cast/ forged with the body of the valve. Face to face/ end to end dimensions shall conform to API 6D. Face-to-face and end-to-end dimensions for valve sizes not specified in API 6D shall be in accordance with ASME B 16.10. Face-to-face and end-to-end dimensions not shown in API 6D or in ASME B 16.10 shall be as per Manufacturer Standard and shall be subject to approval by Company.

Flanged ends, if specified, shall have flanges as per ASME B16.5 for valve sizes up to DN 600 mm (24") excluding DN 550 mm (22"), as per MSS-SP-44/ ASME B 16.47 Series A for valve sizes DN 550 mm (22") and for DN 650 mm (26 inches) and above. Flange face shall be either raised face or ring joint type (RTJ) as indicated in Valve Data Sheet. Flange face finish shall be serrated or smooth as indicated in Valve Data Sheet. In case of RTJ flanges, the groove hardness shall be minimum 140 BHN.

Butt weld end preparation shall be as per ASME B 16.25. The thickness of the pipe to which the valve has to be welded shall be as indicated in the Valve Data Sheet. In case difference exists between thickness of welding ends of valve and connecting pipe, the welding ends of valve shall have bevel preparation as per ASME B31.4 or ASME B31.8 as applicable.

In case of all Butt welded end valves (including soft seated valves or valves with primary metal to metal and secondary soft seats), actual yield strength of valve body shall not be less than 2/3rd of the specified minimum yield strength (SMYS) of the connecting pipe material.

For soft seated valves with Butt welded end, valves shall be provided with pup pieces on

Copyright VCS Quality Services Private Limited – All rights reserved

Digitally signed by RACHNA SHUKLA
Date: 2025.03.13 12:53:14 IST

either side of length 200 mm each for size up-to 8" & 250 mm for size 10" and above, with material as specified in valve data sheet. Length of pup piece shall be confirmed by manufacturer so as to avoid damage to seats during field welding or post weld heat treatment. Pup piece thickness shall be calculated for the class rating. Vendor shall provide for each type (considering size, grade and thickness of the pup pieces used for all offered valves) of pup piece, test rings (500 mm long) from pup piece material for field weld procedure qualification. Valves shall be tested along-with pup piece.

4.15 Design of weld end valves shall be such that during field welding operations, the soft seals or plastic components of the valve (where ever used) is not liable to be damaged. The manufacturer shall furnish necessary field welding instructions and post-weld test procedure to demonstrate integrity and leak-tightness of valves after field welding operations.

4.16 POSITION INDICATORS

Valve shall be provided with ball position indicator and stops of rugged construction at the fully open and fully closed positions. For actuated valves, additionally mechanical means of position indicator shall be provided.

4.17 STEM EXTENSIONS

When stem extension requirement is indicated in Valve Data Sheet, the valves shall have the following provisions.

a. Valves provided with stem extension shall have water proof outer casing. Length of stem extension shall be as indicated in Valve Data Sheet. The length indicated corresponds to the distance between centerline of the valve opening and the top of mounting flange for valve operating device (gear operator/ power actuator as applicable).
b. In case of below Ground LTCS valves, Stem extension material shall be equivalent to stem material.
c. Vent and drain connections and sealant injection lines shall be terminated adjacent to the valve operator by means of suitable piping anchored to the valve body. The pipe used shall be API 5L Gr. B/ ASTM A 106 Gr. B, with Sch 160 for carbon steel valves and ASTM A 333 Gr 6, with Sch 160 for Low temperature carbon steel valves or the material shall be as specified in valve data sheet. The material of fittings for Carbon Steel valve shall be ASTM A105/ ASTM A234 Gr. WPB and material for the fittings for low temperature carbon steel valves shall be ASTM A 350 Gr LF2 Cl 1 or the material shall be as specified in valve data sheet. The fittings and valve end shall be Socket welded ANSI class 6000# as per ASME B 16.11 (For piping class up to 600#) and BW end (For Piping Class 900#).
d. Stem extension and stem housing design shall be such that the complete assembly will form a rigid unit giving positive drive under all conditions with no-possibility of free movement between valve body, stem extension or its operator.
e. Outer casing of stem extension shall have 3/8” or 1/2" NPT plugs at the top and bottom, for draining and filling with oil to prevent internal corrosion.
f. The Stem Extension shall be self-relieving.

Copyright VCS Quality Services Private Limited – All rights reserved

Digitally signed by RACHNA SHUKLA
Date: 2025.03.13 12:53:14 IST

4.18 OPERATING DEVICES

a. Valves shall have a power actuator or manual operator as indicated in the Valve Data Sheet. In case of manual operator, valve sizes, DN ≤ 100 mm (4") shall be wrench operated and valve sizes, DN ≥ 150 mm (6") shall be gear operated. The length of wrench shall not be longer than twice the face to face or end to end dimension of the valve. Each wrench operated valve shall be supplied with wrench. Valve design shall be such that damage due to malfunctioning of the operator or its controls will only occur in the operator gear train or power cylinder and that damaged parts can be replaced without the valve cover being removed.

b. The power actuator shall be in accordance with the Company Specification issued for the purpose and as indicated in the Valve and Actuator Data Sheet. Operating time shall be as indicated in Valve Data Sheet. Valve operating time shall correspond to full close to full open/ full open to full close under maximum differential pressure corresponding to the valve rating. For actuated valves, the actuator's rated torque output shall be 1.25 times the break torque required to operate the ball valve under the maximum differential pressure corresponding to the Valve Class Rating.

c. For the manual operator of all valves, the diameter of the hand wheel or the length of operating wrench shall be such that under the maximum differential pressure, the total force required to operate the valve does not exceed 350N. However, failing to meet above requirement, vendor shall offer gear operated valves. Manufacturer shall also indicate the number of turns of hand wheel in case of gear operators (along with their offer) required for Operating the valve from full open to full close position. The numbers of turn shall not exceed 250 for valves sizes up to 24" and 450 for valve size above 24".

d. Direction of operation of hand wheel or wrench shall be in clock-wise direction while closing the valve. Hand wheels shall not have protruding spokes.

e. Gear operators, when provided, shall have a self-locking provision and shall be fully encased in water proof/ splash proof enclosure and shall be filled with suitable grease.

4.19 The tolerance on internal diameter and out of roundness at the ends for welded ends valves shall be as per connected pipe specification as indicated in the Valve Data Sheet.

4.20 LOCKING DEVICES

When indicated in Material Requisition/Data sheet/ Tender, valves shall have locking devices to lock the valve either in full open (LO) or full close (LC) positions. Locking devices shall be permanently attached to the valve operator and shall not interfere with operation of the valve.

4.21 WELDING

All welds shall be made by welders and welding procedures qualified in accordance with the provisions of ASME Section IX. The procedure qualification shall also include impact test and hardness test when required as per Clause 3.4 to 3.5 of this specification and shall meet the requirements as specified therein.

4.22 REPAIR WELDING

Repair by welding is not permitted for fabricated and forged body valves. However, repair

Copyright VCS Quality Services Private Limited – All rights reserved

Digitally signed by RACHNA SHUKLA
Date: 2025.03.13 12:53:14 IST

by welding as per ASME B16.34 is permitted for cast body valves. Such repairs shall be carried out at casting supplier's care only. Repair shall be carried out before any heat treatment of casting is done. Repair welding procedure qualification shall also include impact test and hardness test when required as per Clause 3.4 to 3.5 of this specification and shall meet the requirements as specified therein. Heat treatment and radiography shall be repeated after the weld repair.

4.23 No Casting is permitted for stem and stem extended material of all valve. Valve stem shall be capable of withstanding the maximum operating torque required to operate the valve against the maximum differential pressure corresponding to applicable class rating. The combined stress shall not exceed the maximum allowable stresses specified in ASME section VIII, Division 1. For power actuated valves, the valve stem shall be designed for maximum output torque of the selected power actuator (including gear box, if any) at valve stem.

4.24 Wherever specified for the part of valve in valve data sheet, minimum thickness of stelliting shall be 1.6mm

4.25 All Soft seated valves shall be fire safe design and qualified as per API 6FA/ API 607/ ISO 10497.

4.26 Soft-seated valves shall have antistatic device.

5 INSPECTION & TESTS

5.1 The Manufacturer shall perform all inspection and tests as per the requirements of this specification and the relevant codes, prior to shipment, at his works. Such inspection and tests shall be, but not limited to, the following:

5.2 All valves shall be visually inspected. The internal and external surfaces of the valves shall be free from any strikes, gouges and other detrimental defects. The surfaces shall be thoroughly cleaned and free from dirt, rust and scales.

5.3 Dimensional check on all valves shall be carried out as per the Company approved drawings.

5.4 Chemical composition and mechanical properties shall be checked as per this specification and relevant material standards, for each heat of steel used.

5.5 Non-destructive examination of individual valve material and component consisting of but not limited to castings, forgings, plates and assembly welds shall be carried out by the Manufacturer.

a. Body castings of all valves shall be radio graphically examined as per ASME B16.34. Procedure and acceptance criteria shall be as per ASME B 16.34. The extent of the radiography shall be as under:

Pressure Class Rating	Valve Size	Extent of Radiography
ANSI 150 # Class	≤ DN 600 mm (24")	Nil
	≥ DN 650 mm (26")	100%

Copyright VCS Quality Services Private Limited – All rights reserved

Digitally signed by RACHNA SHUKLA
Date: 2025.03.13 12:53:14 IST

ANSI 300 # Class	≤ DN 400 mm (16") ≥ DN 450 mm (18")	Nil 100%
ANSI 600 # Class and above	All sizes	100%

Radiography shall be performed after the final heat treatment also.

All castings shall be wet magnetic particle inspected 100% of the internal surfaces. Method and acceptance shall, comply with ASME B 16.34.

b. All valves, with body fabricated from plates or made by, forgings, shall be ultrasonically examined in accordance with the procedure and acceptance standard as per ASME B16.34.

   All forgings shall be Wet magnetic particle inspected 100% of the internal surfaces. Method and acceptance shall comply with ASME B16.34.

c. Bodies and bonnets made by welded assembly of segments of castings, forgings, plates or combinations thereof shall be examined, as applicable, by methods of 5.5 (a) for cast components or 5.5 (b) for forged components and plates.

5.6 Full inspection by radiography shall be carried out on all welds of pressure containing parts. Acceptance criteria shall be as per ASME B 31.4 or ASME B31.8 as applicable and API 1104.

5.7 Welds, which in Company's opinion cannot be inspected, by radiographic methods, shall be checked by ultrasonic or magnetic particle methods and acceptance criteria shall be as per ASME Sec. VIII , Division 1, Appendix 12 and, Appendix 6 respectively.

5.8 All finished wrought weld ends subject to welding in field shall be 100% ultrasonically tested for lamination type defects for a distance of 50 mm from the end. Laminations shall not be acceptable.

a. Weld ends of all cast valves subject to welding in field shall be 100% radio graphically examined and acceptance criteria shall be as per ASME B16.34.

b. After final machining, all bevel surfaces shall be inspected by dye penetrant or wet magnetic particle methods. All defects longer than 6.35 mm are rejected, as are the defects between 6.35 mm and 1.59 mm that are separated by a distance less than 50 times their greatest length. Rejectable defects must be removed. Weld repair of bevel surface is not permitted.

5.9 All valves shall be tested in compliance with the requirements of API 6D. During pressure testing, valves shall not have sealant lines and other cavities filled with sealant, grease or other foreign material: The drain, vent and sealant lines shall be either included in the hydrostatic shell test or tested independently. Test pressure shall be held for at least 30 minutes for both Shell & seat Test. No leakage is permissible during hydrostatic testing. The body cavity self-relieving feature meeting the requirements of clause 4.13 of this specification shall also be checked.

5.10 A supplementary air seat test as per API 6D (Annex I, Para I.9 Type II) shall be carried

Copyright VCS Quality Services Private Limited – All rights reserved

Digitally signed by RACHNA SHUKLA
Date: 2025.03.13 12:53:14 IST

out for all valves. A bubble tight seal is required without the use of any sealant. No leakage is allowed. Test pressure shall be held for at least 15 minutes.

5.11 Valves shall be subjected to Operational Torque Test as per API 6D (Annex I, Para I.6) under hydraulic pressure equal to maximum differential pressure corresponding to the applicable ANSI class rating of valve. It shall be established that the force required to operate the valve does not exceed the requirements stated in section 4.18 (C) of this specification.

5.12 Power actuated valves shall be tested after assembly of the valve and actuator, at the valve Manufacturer's works. At least five Open-Close-Open cycles without internal pressure and five Open-Close-Open cycles with maximum differential pressure corresponding to the valve rating shall be performed on the valve actuator assembly. The time for Full Open to Full Close shall be recorded during testing. If required, the actuator shall be adjusted to ensure that the opening and closing time is within the limits stated in Valve Data Sheet.

Hand operator provided on the actuator shall also be checked after above testing, for satisfactory manual over-ride performance.

These tests shall be conducted on minimum one valve out of a lot of five (5) valves of the same size, rating and the actuator model/ type. In case, the tests do not meet the requirements, retesting/ rejection of the lot shall be decided by the Company's Inspector.

5.13 Subsequent to successful testing as specified in clause 5.11 and 5.12 above, one (1) valve out of the total ordered quantity shall be randomly selected by the Company Representative for cyclic testing as mentioned below:

a. The valve shall be subjected to at least 100 Open-Close-Open cycles with maximum differential pressure corresponding to the valve rating.
b. Subsequent to the above, the valve shall be subjected to hydrostatic test and supplementary air seat test in accordance with clause 5.9 and 5.10.

In case this valve fails to pass these tests, the valve shall be rejected and two more valves shall be selected randomly and subjected to testing as indicated above. If both valves pass these tests, all valves manufactured for the order (except the valve that failed) shall be deemed acceptable. If either of the two valves fails to pass these tests, all valves shall be rejected or each valve shall be tested at the option of manufacturer.

Previously carried out test of similar nature shall be considered acceptable if the same has been carried out by Manufacturer in last two years. Valves of two sizes below and two sizes above the size of valve previously tested, and rating similar or one rating lower of valve tested previously, shall be qualified.

5.14 Checks shall be carried out to demonstrate that the dissimilar metals used in the valves are successfully insulated as per the requirement of clause 4.12 of this specification.

5.15 Anti-Static testing for soft seated valves in accordance with L.5 of API 6D.

5.16 Company reserves the right to perform stage wise inspection and witness tests as indicated in clause 5.1 above at Manufacturer's works prior to shipment. Manufacturer shall give reasonable access and facilities required for inspection to the Company's

Copyright VCS Quality Services Private Limited – All rights reserved

Digitally signed by RACHNA SHUKLA
Date: 2025.03.13 12:53:14 IST

Inspector. Company reserves the right to require additional testing at any time to confirm or further investigate a suspected fault. The cost incurred shall be to Manufacturer's account.

In no case shall any action of Company or his inspector shall relieve the Manufacturer of his responsibility for material, design, quality or operation of valves.

Inspection and tests performed/ witnessed by the Company's Inspector shall in no way relieve the Manufacturer's obligation to perform the required inspection and tests.

6 TEST CERTIFICATES

Manufacturer shall submit the following certificates in accordance with EN 10204 3.2.

a. Mill test certificates relevant to the chemical analysis and mechanical properties of the materials used for the valve construction as per the relevant standards.
b. Report on heat treatment carried out.
c. Test certificates of hydrostatic and pneumatic tests complete with records of timing and pressure of each test.
d. Test reports of radiograph and ultrasonic inspection, MPI and DP Inspection
e. Test report on operation of valves conforming to clause 5.11, 5.12 and 5.13 of this specification.
f. All other test reports and certificates as required by API 6D and this specification.

The certificates shall be considered valid only when signed by Company's Inspector. Only those valves which have been certified by Company's Inspector shall be dispatched from Manufacturer's works.

7 PAINTING

Valve surface shall be thoroughly cleaned, freed from rust and grease and applied with sufficient coats of corrosion resistant paint. Surface preparation shall be carried out by shot blasting to SA-2 ½ / SSPC-SP10. For Coastal area, painting shall be suitable for industrial marine environment. For the valves to be installed underground, when indicated in Valve Data Sheet, the external surfaces of buried portion of the valve shall be painted with 100% Solid high build epoxy with a minimum dry film thickness of 1000 microns or 1.5 mm thick polyurethane coating.

8 MARKING & SHIPMENT

8.1 All valves shall be marked as per API 6D. The units of marking shall be metric except nominal diameter, which shall be in inches.

8.2 Valve ends shall be suitably protected to avoid any damage during transit. All threaded and machined surfaces subject to corrosion shall be well protected by a coat of grease or other suitable material. All valves shall be provided with suitable protectors for flange faces, securely attached to the valves. Bevel ends shall be protected with metallic or high impact plastic bevel protectors.

8.3 All sealant lines and other cavities of the valve shall be filled with sealant before shipment.

Copyright VCS Quality Services Private Limited – All rights reserved

Digitally signed by RACHNA SHUKLA
Date: 2025.03.13 12:53:14 IST

8.4 Packaging and shipping instructions shall be as per API 6D.

8.5 The serial number of each valve indicated on its name plate shall appear on all required documentation in accordance with EN 10204 3.2.

8.6 Name Plate material shall be minimum stainless steel. Marking shall be as per MSS-SP-25

8.7 All valves shall be transported with ball in fully opened condition

8.8 On packages, following shall be marked legibly with suitable marking ink:

a. Order Number
b. Manufacturer's Name
c. Valve size and rating
d. Tag Number
e. Serial Number

9 SPARES & ACCESSORIES

9.1 Manufacturer shall furnish list of recommended spares and accessories for valves required during start-up and commissioning and supply of such spares shall be included in the price quoted by Manufacturer.

9.2 Manufacturer shall furnish list of recommended spares and accessories required for two years of normal operation and maintenance of valves and price for such spares shall be quoted separately.

10 DOCUMENTATION

Documentation to be submitted by Manufacturer to Company is summarized below. Number of Copies (Hard copies / soft copies etc.) shall be as indicated in CONTRACT document.

10.1 At the time of bidding, Manufacturer shall submit the following documents:

a. Reference list of similar ball valves manufactured and supplied in last seven years indicating all relevant details including project, year, client, location, size, rating, service etc.

b. Torque curves for the power actuated valves along with the break torque, running torque for the valve stem and maximum allowable stem torque.

c. Copy of valid API 6D Certificate.

d. Fire Safe test certificate qualifying the valves as per API 6FA/ API 607/ ISO 10497 carried out in last 10 years shall be furnished.

e. Details of support foot including dimensions and distance from valve centreline to bottom of support foot.

f. List of recommended spares required during start-up and commissioning & 2 years of normal operation and maintenance.

Copyright VCS Quality Services Private Limited – All rights reserved

Digitally signed by RACHNA SHUKLA
Date: 2025.03.13 12:53:14 IST

10.2 After placement of order, the Manufacturer shall submit the following drawings, documents and specifications for Company's approval*:*

a. General arrangement & detailed sectional drawings showing all parts with reference numbers and material specifications, overall dimensions and features. Number of turns of hand wheel required for operating the valve from full open to full close position for Gear Operated valves, painting/ coating scheme, Complete dimensional details of support foot (where applicable), shall be indicated in the GA.

Manufacture of valves shall commence only after approval of the above documents. Once the approval has been given by Company, any changes in design, material and method of manufacture shall be notified to Company whose approval in writing of all changes shall be obtained before the valve is manufactured.

10.3 Within 30 days from the approval date, Manufacturer shall submit to Company the approved drawings, documents and specifications as listed in clause 10.2 above.

10.4 Prior to shipment, Manufacturer shall submit to Company following:

a. Test certificates as per clause 6.0 of this specification.

b. Manual for installation, erection, maintenance and operation instructions including a list of recommended spares for the valves.

10.5 All documents shall be in English language only.

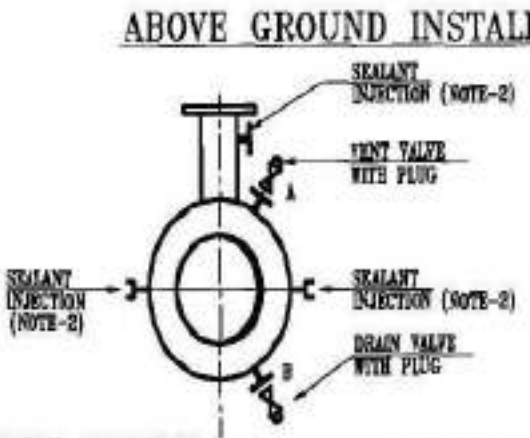

FULL BORE VALVES

VALVE SIZE, DN(mm)	A, DN(mm)	B, DN(mm)
50 TO 150	–	15
200 TO 600	15	25
650 & ABOVE	15	40

REDUCED BORE VALVES

VALVE SIZE, DN(mm)	A, DN(mm)	B, DN(mm)
50 TO 200	–	15
250 TO 750	15	25
ABOVE 750	15	40

NOTES:–

1 ALL VALVES (BALL OR PLUG) AND PLUGS FOR A AND B SHALL BE APPROVED BY THE PURCHASER.
2 SEALANT POINTS SHALL BE PROVIDED FOR FULL BORE VALVES OF NOMINAL VALVE SIZE 200 mm (8") & ABOVE AND REDUCED BORE VALVES OF NOMINAL VALVE SIZE, DN 250 mm (10") AND ABOVE ONLY. SEALANT LINES SHALL HAVE PROVISION TO REPLACE THE SEALANT INJECTION FITTING UNDER FULL LINE PRESSURE. SEALANT LINES SHALL HAVE BLOCK VALVE & INTERNAL NON RETURN VALVE.
3 ALL VENT/DRAIN CONNECTION SHALL BE WELDED WITH THE BODY.

Copyright VCS Quality Services Private Limited – All rights reserved

Digitally signed by RACHNA SHUKLA
Date: 2025.03.13 12:53:14 IST

UNDERGROUND INSTALLATION

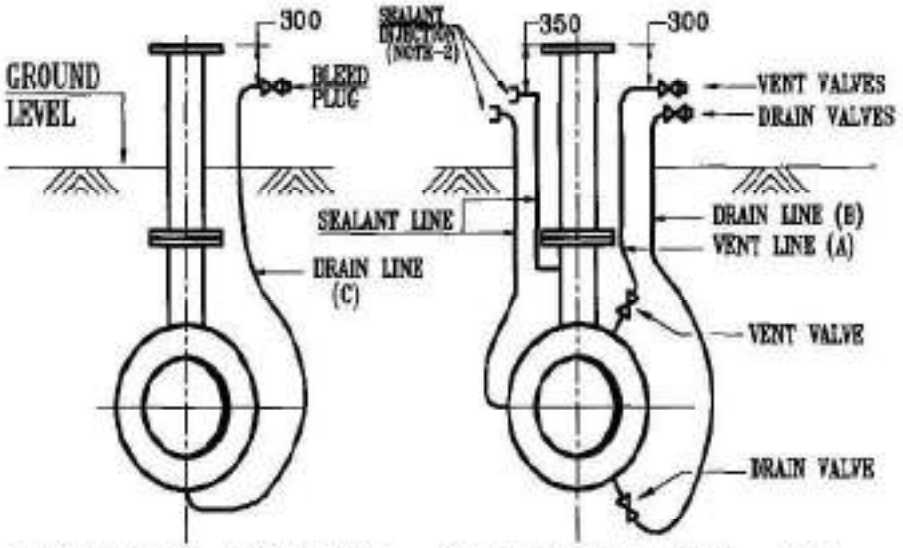

FULL BORE (FB) VALVES

VALVE SIZE, DN(mm)	A, DN(mm)	B, DN(mm)	C, DN(mm)
50 TO 150	-	-	15
200 TO 300	25	25	-
350 TO 600	25	25	-
650 & ABOVE	40	40	-

REDUCED BORE (RB) VALVES

VALVE SIZE, DN(mm)	A, DN(mm)	B, DN(mm)	C, DN(mm)
50 TO 200	-	-	15
250 TO 400	25	25	-
450 TO 750	25	25	-
800 & ABOVE	40	40	-

NOTES:-

1. ALL VALVES (BALL OR PLUG) AND PLUGS FOR A AND B SHALL BE APPROVED BY THE PURCHASER.
2. SEALANT POINTS SHALL BE PROVIDED FOR FULL BORE VALVES OF NOMINAL VALVE SIZE 200 mm (8") & ABOVE AND REDUCED BORE VALVES OF NOMINAL VALVE SIZE, DN 250 mm (10") AND ABOVE ONLY. SEALANT LINES SHALL HAVE PROVISION TO REPLACE THE SEALANT INJECTION FITTING UNDER FULL LINE PRESSURE. SEALANT LINES SHALL HAVE BLOCK VALVE & INTERNAL NON RETURN VALVE.
3. ALL VENT/DRAIN CONNECTION IN BURIED SECTION SHALL BE OF WELDED CONSTRUCTION. ALL PIPING INCLUDING VALVE ENDS IN BURIED PORTIONS OF VENT & DRAIN SHALL BE WELDED TYPE.

FIGURE-4.9

Copyright VCS Quality Services Private Limited – All rights reserved

Digitally signed by RACHNA SHUKLA
Date: 2025.03.13 12:53:14 IST

VCS QUALITY SERVICES PVT. LTD.

STANDARD SPECIFICATION

FOR

WATER CROSSING

(CONVENTIONAL TRENCHING)

VCS – SS – PP - 2005

Rev. No	Date	Prepared By	Checked By	Approved By	Authorized By
04	29.04.2022	RP	MC	HK	GW
03	04.01.2022	SR	MC	HK	HK

UNCONTROLLED COPY	:	If printed
CONTROLLED COPY	:	If in soft and signed

Copyright VCS Quality Services Private Limited – All rights reserved

Digitally signed by RACHNA SHUKLA
Date: 2025.03.13 12:53:14 IST

REVISION RECORD						
Rev.	**Revision Date**	**Prepared by**	**Checked by**	**Approved by**	**Authorized by**	**Revision Description**
00	23.06.2017	AS	SM	AD	SK	Issued as Standard Specification
01	19.09.2019	SSS	SM	AD	SK	Document formatting, Cover Page, Doc numbering updated from SS-PL-001 to VPC-SS-PL-0001 keeping Revision Number Same)
02	28.01.2020	MB	MC	AD	SK	Document numbering updated from VPC-SS-PL-0001 to VPC-SS-PP-2004
03	04.01.2022	SR	MC	HK	HK	Revised as marked, Doc No Change from 2004 to 2005
04	29.04.2022	RP	MC	HK	GW	VCS QMS Integration

Copyright VCS Quality Services Private Limited – All rights reserved

Digitally signed by RACHNA SHUKLA
Date: 2025.03.13 12:53:14 IST

ABBREVIATIONS:

ASME	American Society of Mechanical Engineers
ASTM	American Society of Testing of Materials
API	American Petroleum Institute
OISD	Oil Industry Safety Directorate

Copyright VCS Quality Services Private Limited – All rights reserved

Digitally signed by RACHNA SHUKLA
Date: 2025.03.13 12:53:14 IST

CONTENTS

1.0 SCOPE 5

2.0 REFERENCE CODES, STANDARDS AND SPECIFICATIONS 5

3.0 GENERAL REQUIREMENT 6

4.0 TRENCHING 9

5.0 POLLUTION CONTROL MEASURES 12

6.0 CONTINUOUS CONCRETE COATING 12

7.0 HYDROSTATIC PRE-TESTING 12

8.0 INSTALLATION 13

9.0 INSTALLATION OF PARALLEL PIPELINES 14

10.0 BACKFILLING AND BANK PROTECTION 14

11.0 POST-INSTALLATION HYDROSTATIC TEST 16

12.0 POST-CONSTRUCTION SURVEY 16

13.0 FINAL CLEAN-UP 16

14.0 DOCUMENTATION 17

Copyright VCS Quality Services Private Limited – All rights reserved

Digitally signed by RACHNA SHUKLA
Date: 2025.03.13 12:53:14 IST

1.0 SCOPE

This specification covers the minimum requirements for the various activities to be performed by Contractor for the construction of pipeline major water crossings by conventional trenching method. Provisions of this specification are applicable only for " Water Crossing" specifically named as such in the contract.

This specification shall be read in conjunction with the condition of all specifications and documents include in the contract between company and contractor.

2.0 REFERENCE CODES, STANDARDS AND SPECIFICATIONS

The latest edition(edition in force at the time of floating the enquiry) of following Codes, Standards and regulations are referenced in this specification and all provisions of these reference codes, standards and regulations shall be applicable.

AMERICAN SOCIETY OF MECHANICAL ENGINEERS (ASME)

B 31.4	:	Pipeline Transportation system for liquid Hydrocarbon & other liquids.
B 31.8	:	Gas Transmission and Distribution Piping Systems.

AMERICAN PETROLEUM INSTITUTE (API)

RP 1102	:	Liquid Petroleum Pipeline Crossing Railroads and Highways
1109	:	Marking Liquid Petroleum Pipeline Facilities
1104	:	Welding of Pipelines and Related Facilities

PNGRB REGULATIONS:

G.S.R 808(E) T4S : Regulations for Natural Gas Pipelines

G.S.R. Infra/ T4S/ P&PPL : Regulations for Petroleum and Petroleum products pipelines

G.S.R. 612(E) T4S : Regulations for CGD Network

PIPE LINE SAFETY STANDARD

Part 192, Title 49	:	Transportation of Natural and other Gases by

Copyright VCS Quality Services Private Limited – All rights reserved

Digitally signed by RACHNA SHUKLA
Date: 2025.03.13 12:53:14 IST

Part 195 : Transportation of Liquid by Pipe Line

COMPANY STANDARD SPECIFICATIONS

Following Company specifications shall form integral part of this specification and shall be complied with when applicable to the works covered in the contract.

VPC-SS-PP-2001	Standard Specification for Pipeline Construction
VPC-SS-PP-2010	Standard Specification for Pipeline Concrete Weight Coating of Onshore Pipelines
VPC-SS-PP-2014	Standard Specification for Hydrostatic Testing of Onshore Pipelines
VPC-SS-PP-2015	Standard Specification for Pipeline Markers

In case of conflict between various requirements of this specification and reference standards mentioned above, more stringent requirement shall apply unless otherwise agreed by Company.

3.0 GENERAL REQUIREMENT

a. If specified, Contractor shall carry out all geotechnical and hydrological investigation as per relevant specification. Contractor shall also carry out scour calculation based on the above and submit all reports and calculation to company for review and approval.

b. Contractor shall comply with all the conditions and requirements issued by Authorities having jurisdiction in the area where the work is to be performed. Contractor shall, at his own responsibility, obtain necessary permits from the Authorities having jurisdiction, for performing its work.

c. Contractor shall take full responsibility for the suitability, stability and safety of all operations and methods involved in the work.

d. Contractor shall be deemed to have inspected and examined the work area and its surroundings and to have satisfied himself so far as practicable as to the form and nature thereof, including sub-surface conditions, hydrological and climatic conditions, the extent and nature of the work and materials necessary

Copyright VCS Quality Services Private Limited – All rights reserved

Digitally signed by RACHNA SHUKLA
Date: 2025.03.13 12:53:14 IST

for the completion of the work, and the means of access to the work area.

e. Prior to start of any work, Contractor shall carry out a pre-construction survey of the major water crossings and. acquaint himself with site conditions and to collect any data regarding the water velocity and the tidal variation in the flow pattern and shall verify the suitability of his equipment and the method of construction.

f. Contractor shall, with due care and diligence, execute the work in compliance with all laws, by-laws, ordinances, regulation etc., and provide all services and labor, inclusive of supervision thereof, all materials, excluding the materials indicated as "Company Supplied Materials", equipment appliances or other things of whatsoever nature required in or about the execution of the work, whether of a temporary or permanent nature.

g. Contractor shall be deemed to have obtained all necessary information as above mentioned as to risks, contingencies and all other circumstances, which may influence the work.

h. Contractor shall, in connection with the work, provide and maintain at his own-costs all lights, guards, fencing, watching etc., when and where necessary or required by Company or by any duly constituted Authority for the protection of the work and properties or for the safety and the convenience of public and/or others.

i. If no public roads exist, Contractor shall arrange at his own for access to work areas at no extra time and cost to Company.

j. Before start of the field construction work, Contractor shall submit the following for approval of each major water crossing

- Installation method.
- Proposed time schedule indicating start and finish dates with detailed break-up showing critical activities.
- Layout, location and other drawings / sketch of work area.
- Details of equipment (including number and capacity of equipment deployed)
- Manpower deployment during construction
- Proposed sub-contractors and / or vendors (if any) along with their scope of work.

The description of the installation method as a minimum shall include the following:

Copyright VCS Quality Services Private Limited – All rights reserved

Digitally signed by RACHNA SHUKLA
Date: 2025.03.13 12:53:14 IST

a. Preparation of fabrication yard and launching area along with proposed Layouts.

b. Pipeline construction details (including hauling, stringing, welding, NDT, concrete coating, etc.).

c. Study of water currents in relation to the method of launching (on bottom and on surface)

d. Preparation of sheet piling/Details of Dams/Coffer dams/diversion of water methodology proposed.

e. Calculations For stability of pipeline during launching and final test.

f. Grading of bank area & record of it original level for restoration purpose.

g. Buoyancy Studies.

h. Pre-test procedure.

i. Pulling or other installation method and related calculations / analysis including rope test, checking of winch/crane pulling capacity etc.

j. Pulling arrangement including launch way and anchoring and braking device.

k. Trench correction before launching / lowering.

l. Method of positioning and sinking / lowering of pipeline.

m. Method of rectification of damages to the pipeline / coating, during launching.

n. Method of backfilling and bank protection.

o. Final test procedure after backfilling. .

p. Safety system adopted

q. Communication system adopted during construction/testing/survey.

r. Abandonment and recovery procedures in case of failure.

s. Procedure for corrosion coating of field joint

Approval by Company of the methods used by Contractor shall in no way relieve Contractor from the sole responsibility for safe and satisfactory installation of the crossing.

Copyright VCS Quality Services Private Limited – All rights reserved

Digitally signed by RACHNA SHUKLA
Date: 2025.03.13 12:53:14 IST

4.0 TRENCHING

4.1 EXCAVATION

Contractor shall dredge or excavate the trench for the water crossing in conformity with the approved drawings. Dredging of the trench shall be executed as accurately as possible.

The trench shall be excavated to such depth as, required to provide the minimum cover and the pipeline configuration as specified. The pipeline profile of the crossing shall be followed as accurately as possible. Before laying, the trench shall be cleaned and leveled. The trench shall be subject to inspection by Company prior to installation of the pipe.

Contractor will not be entitled for any compensation in terms of time and cost, if his work is hampered or delayed due to weather conditions, any obstacles / or any traffic on the spot, where work is executed.

Contractor is fully responsible for the execution of the blasting (wherever permitted), the dredging and excavation work, hopping of the spoil; transportation, dumping on land or in water, all to be executed in agreement with Authorities, land owners and Company.

Contractor may be obliged to dredge or excavate a trench deeper or wider than indicated in the drawings. in order to-properly lay the pipeline in unstable (underwater) areas, or near and adjacent to the banks of water-courses. It shall be understood that Contractor is aware of such problems at the time of his Bid and that when such additional excavation is required, it shall be done by Contractor as part of the work and that he will install the necessary provisions and/or temporary works such as sheet-piling, special filling materials, etc. at no extra cost to Company.

Contractor, if so desired by Company, shall make cross profiles at intervals of not more than 10.0 m of the bottom of the watercourse along the surveyed centerline of the water crossing. In such a case, horizontal measurements shall be taken by triangulation or tapping between known points and shall be made with such accuracy that the location of each vertical measurements is known with 1.0 m. Vertical measurements shall be taken with a sonic recording device, or with line and rod, as directed by Company and shall be taken with such an accuracy that

Copyright VCS Quality Services Private Limited – All rights reserved

Digitally signed by RACHNA SHUKLA
Date: 2025.03.13 12:53:14 IST

each depth is known within 0.2 m. Vertical measurements shall be taken at points averaging not more than 5.0 m apart and no two measurements shall be more than 7.0 m apart. The cross profiles shall extend at least 10 m on both sides of the top of the trench.

All measurements shall be recorded by Contractor. Company may witness such measurements. The resulting profile, corrected to the elevation of the undisturbed watercourse, shall then be the reference profile. Said profile shall be plotted on a 1:200 vertical and horizontal scale.

Contractor shall keep the trench in good condition until the pipe is laid, and no claim is to be made to the Company by reason of its caving either before or after the pipe is laid. Contractor shall do whatever is required to excavate the trench, install the pipe in it and backfill the trench in accordance with the specifications at no extra cost to Company.

Immediately before installation of the water crossing in the excavated trench, Contractor shall prepare a profile of the trench bottom along the surveyed center line of the water crossing for comparison with the reference profile. Contractor shall also make cross sections of the trench at intervals of not more than 50 m. All profiles and cross section measurements shall be taken as specified and, if required, shall be witnessed by Company. These data shall be submitted to Company for approval.

Contractor shall grade the trench in such a manner as to give the maximum amount of uniform support to the pipeline when it is lowered or pulled into place. The maximum unsupported span shall not exceed 10.0 m.
In submerged sections, where rock or gravel is encountered in the bottom of the trench, padding is required. The thickness of the padding under the concrete coated pipe shall at least be 0.5 m and after installation at least 0.5 m around the pipe.
Blasting, if any, and padding shall be included in the Contractor's work.

In case of major rivers, Navigational traffic shall not be obstructed, unless permission has been given thereto. Contractor shall issue all necessary, publication according to the local requisitions. Instructions given by Authorities shall be followed accurately and immediately, so that traffic encounters no

Copyright VCS Quality Services Private Limited – All rights reserved

Digitally signed by RACHNA SHUKLA
Date: 2025.03.13 12:53:14 IST

hindrance. During the execution of dredging work by Contractor, bearings, measurements and levels shall be taken by or on behalf of Company. Contractor shall render assistance for this purpose and make available for Company appropriate survey
boats, fully manned and equipped, before the trench excavation work of the water crossing can be started-

4.2 PUMPING LINES

In case Contractor uses pumping lines to discharge the spoil, he shall take care of the necessary permits.

Pumping lines, discharges and siphons shall be installed by Contractor and removed before the completion of the work. At crossing with existing roads, the pumping lines shall be led through a casing pipe bored/jacked under the road or led through a porch over the road. A stress calculation must then be handed over to Company. The necessary provision to embank the dumping area and also the spoil basins shall be made by Contractor. Contractor is responsible for transportation of the spoil and dumping on land and is liable for damage to works of third parties caused by leakage of pumping lines, etc. Contractor shall at all-time prevent overflow of pumping water, spoil or sand over embankments, parcels or roads. Further more, Contractor shall safeguard Company from claims of compensation by third parties due to encountered damage.

4.3 SPOIL

Spoil which is not dumped on and including spoil acquired after cleaning the water crossing trench, shall be transported and dumped in places, designated thereto by agreement between Contractor and Authorities and approved by Company. Spoil shall be transported in (split), barges; only those barges shall be used that avoid spilling during transportation due to incorrect closing of the flaps, etc. Spoil, which is dumped outside the designated places, shall be removed by Contractor at first notice by Company.

4.4 DIKES, DAMS AND WEIRS

Contractor shall install temporary provision in the existing dikes, dams, etc. to prevent flooding of low areas.
Therefore, in general, in existing dikes, dams, etc. a double substituting weir must be installed before start of excavation in the existing dike or dam. Such a double substituting weir can be a closed wall of sheet piling, supported by soil. The provisions shall be such that the underwater profile of the dredged trench, the

Copyright VCS Quality Services Private Limited – All rights reserved

Digitally signed by RACHNA SHUKLA
Date: 2025.03.13 12:53:14 IST

water flow and water movement caused by boats/ ships etc. cause no slides / cave-ins of the dike or dam.

5.0 POLLUTION CONTROL MEASURES

Contractor shall take all necessary precautions not to pollute river water and banks during entire construction operation. Equipment deployed and, construction methodology adopted shall be-such, that minimum damage is caused to the existing environmental conditions. Union and State Government requirements concerning pollution control and environmental protection 'shall be fully complied with.

6.0 CONTINUOUS CONCRETE COATING

Contractor shall provide concrete coating over the pipeline including the bends in accordance with the specification issued for the purpose and approved procedure. Contractor shall coat the weld joints in order to arrive at the continuously concrete coated pipeline. However, the concrete coating shall be applied after the hydrostatic pretest.

7.0 HYDROSTATIC PRE-TESTING

Contractor shall hydrostatically pre-test the pipe string of each water crossing before installation as per approved procedure.

Joint coating of the welds shall be done after this pre-test.

The section of the pipeline corresponding to the crossing shall, before installation, be subjected to a minimum hydrostatic test pressure equal to 1.25 / 1.5 times design pressure as applicable. The combined equivalent stress in the pipeline due to bending and test pressure shall not exceed 95% of the SMYS of the pipe material.

After the temperature has been stabilized, the pressure shall be maintained in the pipeline for at least six hours and recorded by manothermograph. During test, the Contractor shall check all welds for leakage. Failure, if any, during the test shall be rectified by the Contractor. If the same is due to failure on account of any cause other than defect in materials supplied by Company, the repairs shall be done free of cost, to the satisfaction of Company.

Copyright VCS Quality Services Private Limited – All rights reserved

Digitally signed by RACHNA SHUKLA
Date: 2025.03.13 12:53:14 IST

8.0 INSTALLATION

Contractor shall submit a detailed scheme for the method, proposes to adopt for installing the pipeline to Company for approval. Contractor shall calculate all stresses in the pipeline while laying and check whether the stresses remain within permissible limits. A set of all calculations shall be submitted to Company for approval.

Contractor shall perform all work required to install the water crossings, including the possible appurtenances indicated in the drawings. The water crossings shall be installed in such a manner as to comply with the requirements and conditions stated by the Relevant Authorities issuing the permits. Contractor shall pay special attention to minimize any damage to embankments and dikes in the vicinity of water crossings.

The equipment for launching shall be arranged in such a way that the pipeline is laid without impact or jerking and is not subjected to stresses of any type other than those which are allowable. Minimum allowed radius of curvature shall be followed, particularly at the end of the launching way towards the water in the freely suspended section.

During the launching the pipe shall have a submerged weight of 30 kg/meter with a tolerance of ±10%.

After the water-crossing section has been installed in place, Contractor shall fill this pipeline section including the pertaining land pipeline sections with water for the final testing.

Contractor shall check if the position and depth of the water crossing are in accordance with the approved drawing, by means of a profile of the pipeline, before and after the water crossing section is filled with water. Contractor shall lower each pipeline section, which is not sufficiently deep by dredging or jetting the underlying ground.

The maximum allowed horizontal deviation from the required centre-line shall be limited by the following:

For pipeline dia up to including 500 mm : 300 mm

For pipeline dia greater than 500 mm : 500 mm

Prior to backfill the pipeline shall, when laid in the trench, conform to the bottom contour of the trench grade, so that it will be firmly, uniformly and continuously supported within the permissible limits of unsupported spans as specified in Para 4.1.

If the pipe does not properly fit the trench or does not rest at sufficient depth to satisfy the minimum requirements of cover as specified in approved drawings, the

Copyright VCS Quality Services Private Limited – All rights reserved

Digitally signed by RACHNA SHUKLA
Date: 2025.03.13 12:53:14 IST

Contractor shall make necessary corrections to trench so that the pipe, when finally in position in the trench, shall fully meet the specification, failing which Contractor may be asked to remove the pipeline. This shall be done at no extra time and cost to the Company.

9.0 INSTALLATION OF PARALLEL PIPELINES

When parallel pipelines are required to be installed across major water crossing, Contractor shall further comply with the following requirements.

Depending on the diameter of the parallel pipelines, the characteristics of the crossing and the limitation of Contractor's equipment, Contractor may propose installation of the parallel pipelines either together in a combined operation or separately in a common trench.

If the pipelines are installed together, the minimum clear distance between the parallel pipelines (measured from the outside diameters of the concrete coated pipes) shall be 500 mm. Contractor shall provide spacers (at sufficient intervals along the length of the pipe sections), securely fixed to the pipes, or shall propose other suitable alternative methods, so as to ensure that the stipulated minimum clear distance is maintained. The buoyancy of the combined installation (pipes spacers), shall be checked before installation. The spacers may be removed before the trench is backfilled.

Contractor shall furnish detailed drawings/calculations for the pipe assembly, showing the details of spacers/other arrangements for Company's approval before start of construction.

If the parallel pipelines are installed separately in a common trench, the minimum clear distance between the parallel pipelines in the trench shall be 5000 mm. Contractor shall ensure that this minimum spacing is maintained till the time the trench is backfilled.

CONSTRUCTION EQUIPMENT

All critical construction equipment deployed shall have a factor of safety of 2 (minimum) over the calculated loads/capacities.

CS Conduit shall be installed by the Contractor as per the requirements stipulated in the Tender at the River/ Major Water Crossings.

10.0 BACKFILLING AND BANK PROTECTION

10.1 BACKFILLING

Backfilling of the water-crossing section shall be performed as described in the following clauses.

Copyright VCS Quality Services Private Limited – All rights reserved

Digitally signed by RACHNA SHUKLA
Date: 2025.03.13 12:53:14 IST

The bottom of the water way shall be reinstated to its original level by backfilling the trench in a manner and with suitable material and as prescribed and approved by the Authorities and Company. In case material other than the original spoil is required, this shall be supplied by Contractor.

Wherever boulders, rock; gravel and other hard objects are encountered, they shall not be placed directly on the pipe.

Sufficient soft earth, sand or selected and approved back fill material shall be backfilled initially around and over the pipe to provide a protective padding or cushion extending to a minimum thickness of 0.5 m around the pipe before backfilling remainder of the trench with excavated or other material.

Wherever required by Company, Contractor shall cover the nearly backfilled trench with a layer of rock boulders to be approved by Company over a width equal to the width of excavated trench with an extra of 5m on either side at no extra cost to Company.

Backfilling progress of the trench shall be checked continuously and a daily progress report shall be made in three-fold and handed over to Company.

All embankments and/or dikes, bed and banks shall be reinstated to their original state and levels, unless otherwise prescribed in the drawings or by the competent Authorities or Company.

All remaining spoil-deposits shall be cleaned by Contractor to the satisfaction of Company.

10.2 BANK PROTECTION

a. Trenches in banks of major water crossing shall be backfilled with soil approved by Company. The fill at the banks shall be compacted firmly and reinforced with sacked earth, rip-rap, or by other means as directed by Company to the satisfaction of Authorities having jurisdiction thereof. In areas where the backfilled soil is expected to be of loose type, which is prone to flow, the trench shall be backfilled with crushed rock of size approved by Company

   and pipe shall be provided with adequate padding of soil of a quantity approved by Company. Slope breakers if required shall be provided in both the banks. After the trench has been backfilled and during the cleanup works, the water crossing shall be cleaned across the whole width of RoU.

b. Unless stipulated otherwise by the Authority or by Company, Contractor shall protect the banks of the major water crossings by using gravel and boulders filled embankment mattresses of galvanized iron wire to be laid over the backfilled, compacted and graded banks. In case slope of the banks is 1:1 or

Copyright VCS Quality Services Private Limited – All rights reserved

Digitally signed by RACHNA SHUKLA
Date: 2025.03.13 12:53:14 IST

c. more, bank protection shall be carried out using gabions. Bank protection works shall be carried out by Contractor in accordance with the relevant drawings. All materials required for such works shall be supplied by Contractor and all works carried out in accordance with specifications, approved drawings,
c. instructions of Company and to the complete satisfaction of Authorities having jurisdiction at no extra cost to Company.

d. The width of the above protection shall be equal to the width of trench excavated and damage and further extending 10 m on either side. The width of the restoration on the slope shall be determined by the levels.

e. Length of Bank protection shall be as per standard.

f. Before post installation hydrostatic testing, Contractor shall "prove" the Diameter of the pipeline by passing a gauging pig 95% of ID through the pipeline. The gauging pig shall be capable of locating and detecting defects permitted by governing code. Contractor shall supply and install all temporary test headers and other equipment, piping materials and other consumables for the purpose.

11 POST-INSTALLATION HYDROSTATIC TEST

The test pressure shall be same as adopted during pre-testing. The combined equivalent stress in the pipeline due to bending, static head and test pressure shall not exceed 95% of the SMYS of the pipe material. After temperature stabilization, pressure shall be retained in the pipeline for a minimum 24 hours and recorded by manothermograph. The hydrostatic testing shall be carried out in accordance with approved procedures.

12 POST-CONSTRUCTION SURVEY

After laying of the pipeline, Contractor shall carry out a post-construction survey jointly with Company. Any defects brought to the notice of Contractor shall be promptly corrected by Contractor at his own expense to the complete satisfaction of Company.

13 FINAL CLEAN-UP

After completion of construction, Contractor shall clear the site of all balance material and debris. All balance pipe lengths, in case supplied by company, shall be returned to Company's designated stock yard(s). Site shall be cleared to the

Copyright VCS Quality Services Private Limited – All rights reserved

Digitally signed by RACHNA SHUKLA
Date: 2025.03.13 12:53:14 IST

complete satisfaction of Company and Authorities having jurisdiction. All such works shall be done at no extra cost to Company.

14 DOCUMENTATION

In addition to the documents specified elsewhere in this specification, Contractor shall submit to the Company six copies of leach of the following documents/records.

i. Pipe book of the crossing.

ii. Copies of the permits obtained from Authorities having jurisdiction for the various works.

iii. Clearance certificates from the land owners and Authorities having jurisdiction regarding satisfactory clean-up and restoration of pipeline ROU and work areas.

iv. Pre and post installation Hydrotest Report.

v. True profile of the bed and banks of water crossing along the pipeline after backfilling

vi. True profile of the pipeline as installed and depth of cover at top of pipe at 10 m interval.

vii. Location and angle of sag bends and over bends.

viii. Cross section along the pipeline indicating nature and extent of backfill materials, thickness of concrete coating to pipe etc.

ix. Method and extent of bank protection.

Copyright VCS Quality Services Private Limited – All rights reserved

Digitally signed by RACHNA SHUKLA
Date: 2025.03.13 12:53:14 IST

VCS QUALITY SERVICES PVT. LTD.

STANDARD SPECIFICATION

FOR
FLOW TEE

VCS – SS – PP - 2007

Rev. No	Date	Prepared By	Checked By	Approved By	Authorized By
04	29.04.2022	RP	MC	HK	GW
03	03.01.2022	SR	MC	HK	HK

UNCONTROLLED COPY	:	If printed
CONTROLLED COPY	:	If in soft and signed

Copyright VCS Quality Services Private Limited – All rights reserved

Digitally signed by RACHNA SHUKLA
Date: 2025.03.13 12:53:14 IST

REVISION RECORD

Rev.	Revision Date	Prepared by	Checked by	Approved by	Authorized by	Revision Description
00	23.06.2017					Issued as Standard Specification
		AS	SM	AD	SK	
01	24.05.2019					Re-Issued as Standard Specification
		BS	MC	AD	SK	
02	28.01.2020					Document formatting, numbering updated from SS-PL-021 to VPC-SS-PP-2007 other detail update as marked
		MB	MC	AD	SK	
03	03.01.2022					Revised as marked
		SR	MC	HK	HK	
04	29.04.2022					VCS QMS Integration
		RP	MC	HK	GW	

Copyright VCS Quality Services Private Limited – All rights reserved

Digitally signed by RACHNA SHUKLA
Date: 2025.03.13 12:53:14 IST

ABBREVIATIONS:

ASME	American Society of Mechanical Engineers
ASTM	American Society for Testing and Materials
API	American Petroleum Institute
BHN	Brinell Hardness Number
HAZ	Heat Affected Zone
MSS-SP	Manufacturers Standardization Society - Standard Practice
RTJ	Ring Type Joint
SSPC	Steel Structures Painting Council

Copyright VCS Quality Services Private Limited – All rights reserved

Digitally signed by RACHNA SHUKLA
Date: 2025.03.13 12:53:14 IST

CONTENTS

1.0 SCOPE 5
2.0 REFERENCE DOCUMENTS 5
3.0 MANUFACTURER'S QUALIFICATION 6
4.0 MATERIALS 6
5.0 DESIGN AND MANUFACTURE 7
5.1 GENERAL 7
5.2 DESIGN 7
6.0 WELDING 8
7.0 INSPECTION & TESTS 9

Copyright VCS Quality Services Private Limited – All rights reserved

Digitally signed by RACHNA SHUKLA
Date: 2025.03.13 12:53:14 IST

1.0 SCOPE

This specification covers the minimum requirements for the design, manufacture and supply of carbon steel flow tees to be installed in onshore pipeline systems handling non-sour hydrocarbons in liquid or gaseous phase including Liquefied Petroleum Gas (LPG).

2.0 REFERENCE DOCUMENTS

The design, fabrication and supply of Flow Tees shall comply with the latest edition(edition in force at the time of floating enquiry) of the applicable following codes, standards and regulations.

AMERICAN SOCIETY OF MECHANICAL ENGINEERS (ASME)

B 31.4	:	Pipeline Transportation System for Liquid Hydrocarbons and Other Liquids.
B 31.8	:	Gas Transmission and Distribution Piping Systems
B 16.25	:	Butt Welding Ends
B 16.9	:	Factory made Wrought Steel Butt Welding Fittings
BPV Code	:	Section VIII, Appendices 12 and 6.

AMERICAN PETROLEUM INSTITUTE (API)

1104	:	Specification for Welding Pipelines and Related Facilities

AMERICAN SOCIETY FOR TESTING AND MATERIALS (ASTM)

A370	:	Standard Test Methods and Definitions for Mechanical Testing of Steel Products

MANUFACTURERS STANDARDIZATION SOCIETY (MSS)

SP-25	:	Standard Marking System for Valves, Fittings, Flanges and Unions
SP-75	:	Specification for High Test Wrought Butt Welding Fittings
SP-53	:	Quality Standard for Steel Castings and Forgings for Valves, Flanges and Fittings and Other Piping Components - Magnetic Particle Examination Method.

STEEL STRUCTURES PAINTING COUNCIL (SSPC)

VIS-I	:	Visual Standard

Copyright VCS Quality Services Private Limited – All rights reserved

Digitally signed by RACHNA SHUKLA
Date: 2025.03.13 12:53:14 IST

PNGRB REGULATIONS:

G.S.R 808(E) T4S : Regulations for Natural Gas Pipelines

G.S.R. Infra/ T4S/ P&PPL : Regulations for Petroleum and Petroleum products pipelines

G.S.R. 612(E) T4S : Regulations for CGD Network

In case of conflict between various requirements of this specification and reference standards and regulations mentioned above, more stringent requirement shall apply unless otherwise agreed by Purchaser.

3.0 MANUFACTURER'S QUALIFICATION

Manufacturers who intend bidding for flow tees must possess the records of a successful proof test for tees used in the fabrication of flow tees, in accordance with the provisions of ASME B 16.9/ MSS-SP-75, as applicable. These records shall be submitted at the time of bidding qualifying the entire range of fittings offered.

4.0 MATERIALS

4.1 Material for the pressure containing parts of the flow tee shall be as indicated in the Flow Tee Data Sheet. Other parts shall be as per the Manufacturer's standard suitable for the service conditions and shall be subject to approval by Company. In addition, the material shall also meet the requirements specified hereinafter.

4.2 All carbon steel used for fabrication of various components of Flow Tees shall be fully killed.

4.3 Each heat of steel used for the manufacture of pressure containing parts of the flow tees shall have Carbon Equivalent (CE) not greater than 0.45 based on check analysis calculated as per the following formula:

$$CE = C + \frac{Mn}{6} + \frac{Cr + Mo + V}{5} + \frac{Cu + Ni}{15}$$

The Vendor shall submit the material test certificates and product analyses for materials used in the manufacture of the Flow Tees.

4.4 For flow tees specified to be used for Gas service or LPG service, Charpy V-notch test shall be conducted at 0°C or at temperature as specified on data sheet for each heat of steel used in the manufacture of pressure containing parts of flow tee. The test procedure shall conform to MSS-SP-75 / ASTM A370. The average absorbed impact energy values of three full-sized specimens of base metal, weld metal and HAZ shall be 27 joules, unless otherwise indicated in the Data Sheet. The minimum impact energy value of any one specimen shall not be less than 22J. Results of charpy test shall be recorded.

When Low Temperature Carbon Steel (LTCS) materials are specified in Data Sheet or offered by Manufacturer, the Charpy V-notch test requirements of applicable material standard shall be complied with.

Copyright VCS Quality Services Private Limited – All rights reserved

Digitally signed by RACHNA SHUKLA
Date: 2025.03.13 12:53:14 IST

4.5 For flow tees specified to be used for Gas service or LPG service, hardness test shall be carried out as per ASTM A370 for each heat of steel used in the manufacture of tees. A full thickness cross section shall be taken for this purpose and the maximum hardness of base metal, weld metal and HAZ of all the pressure containing parts shall not exceed 248 HV_{10}. Hardness shall be recorded.

5.0 DESIGN AND MANUFACTURE

5.1 GENERAL

Flow Tees shall generally conform to the Figure 4.1 and shall meet the following requirements.

a. Tee used shall comply with ASME B 16.9/MSS-SP-75 and shall be of forged construction. Fabricated Tee (with or without reinforcement pads) shall not be used. Seamless Tee shall be used for run sizes ≤ 400 mm (16") NB. Tee shall be either welded or seamless type for run sizes ≥ 450 mm (18") NB.

b. Size & wall thickness of connected pipeline, design factor, material & grade of material, and corrosion allowance to be considered in design of Flow Tees shall be as indicated in data sheets. Allowable stresses shall be as per applicable design code ASME B 31.4/ASME B 31.8.

c. Inside diameter of internal pipe shall be same as connecting pipeline indicated in data sheet.

d. The Flow Tee shall allow smooth passage of regular batching and cleaning pigs as well as instrumented pigs in both directions.

e. Internal sleeve shall be fixed inside the Tee with suitably shaped forged steel end pieces. Machined end pieces shall not be used.

f. Shape of the holes/slots in the sleeve shall be designed to prevent pig getting stuck or damaged during passage through Flow Tee.

g. The size and number of holes in the internal sleeve shall be such that resulting area of openings is equal to inside area of branch. In case rectangular holes/slots are made, they shall be oriented at an angle of 45 degrees with respect to run centerline.

h. No pups shall be provided on the run or branch unless specified in the Flow Tee Data Sheet.

5.2 DESIGN

5.2.1 Flow tees shall be designed and manufactured in accordance with the provisions of Codes, Standards and Specifications referred in Section 2.0 of this specification. In addition, design factor and corrosion allowance, as indicated in the Data Sheet, shall also be taken into account for design of Flow tees.

5.2.2 Flow tees shall generally conform to the figure shown in the Data Sheet and shall meet the following requirements:

Copyright VCS Quality Services Private Limited – All rights reserved

Digitally signed by RACHNA SHUKLA
Date: 2025.03.13 12:53:14 IST

- An internal pipe having the same internal diameter as the connecting pipeline allowing the passage of scraper/instrumented pigs, shall be provided with holes/slots located in the center line of the branch. The holes/slots shall be oriented at 45° angle. The number(s) and size of holes/slots shall be such as to prevent the pig getting stuck or damaged without affecting the flow through the branch line. The area of the holes/slots shall be at least equal to the internal area of branch size. Calculations for the area shall be furnished.

- A seamless/submerged arc welded "tee" as per ASME B 16.9/MSS-SP-75, enclosing the internal pipe and fixed to it by suitably shaped forged steel rings. Machined steel rings shall not be used. The center to end dimension of the outlet shall meet the minimum recommended dimension of the referred standard. Circumferential welding on the branch outlet is not acceptable. Pups shall not be provided either at the run or at the branch.

- Tees used for fabrication of flow tees shall be seamless type for run sizes DN≤ 350mm (14") and shall be either welded or seamless type for run sizes DN≥ 400 mm (16")

  Tees shall conform to ASME B 16.9 for run size up to DN 350 (14"). For run size DN ≥ 400 mm (16"), the tees shall conform to MSS-SP-75/ASME B 16.9.

5.2.3 The flow tees run/branch diameter and wall thickness shall be as indicated in the Data Sheet, matching with the connecting pipeline. Butt weld ends of flow tees shall be bevelled as per MSS-SP-75.

5.2.4 All flow tees shall be completely stress relieved as per the provisions of MSS-SP-75.

5.2.5 Stub-in or pipe-to-pipe connection shall not be used in the manufacture of flow tees. Tees used for manufacturing of flow tees shall be manufactured by forging or extrusion methods only. Incase flow tees are manufactured using welded tees, the longitudinal weld seam shall be oriented at least 90° to the branch connection.

5.2.6 All welds shall be made by welders and welding procedures qualified in accordance with the provisions of ASME Section IX. The procedure qualification shall include impact test and hardness test and shall meet the requirements of clause 4.4 and 4.5 of this specification respectively.

5.2.7 Repair by welding on parent metal of the flow tee is not permitted. Repair of weld seam by welding shall be carried out only after specific approval by Company's Inspector for each repair. The repair welding shall be carried out by the welders and welding procedures duly qualified as per ASME Section IX and records for each repair shall be maintained. Repair welding procedure qualification shall include all tests, which are applicable for regular production welding procedure qualification. All heat treatment and radiography shall be repeated after the weld repair.

5.2.8 The tolerance on internal diameter and out of roundness at the ends for welded flow tees shall be as per applicable connected pipe specification as indicated in the Data Sheet.

6.0 WELDING

6.1 All welding shall be carried out by welders and welding procedure qualified in

Copyright VCS Quality Services Private Limited – All rights reserved

Digitally signed by RACHNA SHUKLA
Date: 2025.03.13 12:53:14 IST

accordance with ASME Section IX. The Procedure qualification shall include impact test and hardness test and shall meet the requirement of clause 4.4 and 4.5 of this specification respectively.

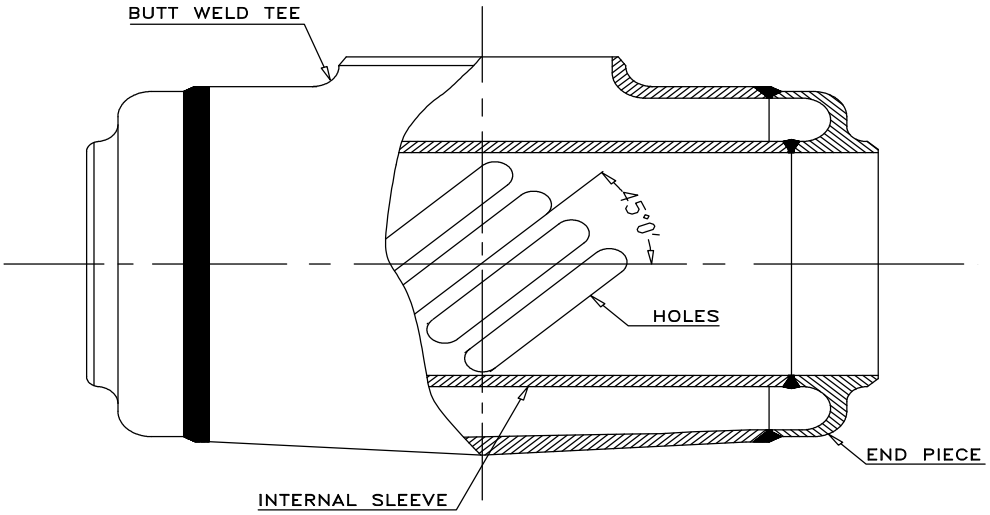

Figure 4.1

6.2 No repairs by welding shall be carried out on base metal of pressure containing components of Flow Tee. Manufacturer shall obtain Purchaser approval prior to carrying out any repair of welds. Repair welding shall be carried out by welders and welding procedures duly qualified as per ASME Section IX and records for each repair shall be maintained. Repair WPS and PQR must also be approved before performing repair welding.

6.3 All pressure containing welds made for fabrication of Flow Tees shall be butt welds. Other welds shall be full penetration girth or fillet welds.

6.4 All weld ends shall be checked for surface defects using dye penetrate prior to welding.

6.5 Bevel ends for field welding of Flow Tees shall be in accordance with ASME B31.4 or B31.8, as applicable.

6.6 All flow tees shall be completely stress relieved as per the provisions of MSS-SP-75.

7.0 INSPECTION & TESTS

7.1 The Manufacturer shall perform all inspections and tests as per the requirements of this specification and the relevant codes, standards and specifications, prior to shipment at his works. Such inspections and tests shall be, but not limited to, the following:

7.2 All flow tees shall be visually inspected for visible surface defects. The internal and external surfaces of the flow tees shall be free from any strikes, gauges and other detrimental defects. Bevels at butt weld ends shall show a smooth contour.

7.3 All dimensions shall be checked for conformance with approved drawings and/or datasheets.

Copyright VCS Quality Services Private Limited – All rights reserved

Digitally signed by RACHNA SHUKLA
Date: 2025.03.13 12:53:14 IST

7.4 Chemical composition and mechanical properties including yield strength, ultimate tensile strength, impact test, elongation and hardness shall be checked as per MSS-SP-75/relevant material standards, and this specification for each heat of steel used.

7.5 Non-destructive examination of individual flow tees shall be performed as given below:

- 100% inspection by radiography shall be carried out on all butt welds of pressure containing parts. Acceptance limits shall be as per API-1104. Radiography shall be performed after the final heat treatment.
- All finished wrought weld ends shall be 100% ultrasonically tested for lamination type defects for a distance of 25 mm from the end. Any lamination larger than 6.35 mm shall not be acceptable.
- Magnetic particle or liquid penetrant examination shall be performed on cold formed butt-welding tees with extruded outlets. The examination shall be carried out as per the Supplementary Requirement SR 14 of MSS-SP-75.
- Welds, which, in Company's Inspector's opinion, cannot be inspected by radiographic methods, shall be checked by ultrasonic or magnetic particle methods. Acceptance criteria shall be as per ASME Section VIII Appendix 12 and Appendix 6 respectively.
- All forgings shall be wet magnetic particle examined on 100 % of the forged surfaces. Method and acceptance shall comply with MSS-SP-53.

7.6 Company's Inspector reserves the right to perform stage wise inspection and witness tests, as indicated in clause 6.1 of this specification, at Manufacturer's works prior to shipment. Manufacturer shall give reasonable notice of time and shall provide without charge reasonable access and facilities required for inspection to the Company's Inspector.

7.7 Inspection and tests performed/witnessed by Company’s Inspector shall in no way relieve the manufacturer’s obligation to perform the required inspection and tests.

7.8 The Manufacturer shall submit an Inspection and Test Plan (ITP) for approval prior to commencement of manufacture.

7.9 The Purchaser will advise the Manufacturer, by marking up the Contract Inspection and Test Plan, of the specific inspection review, witness and hold points required. The Manufacturer shall give ten working days prior notice to the Purchaser of such item or hold point being reached.

Following stages will be subject to witness/hold/review by the Purchaser or third party inspector.

- Visual inspection of the Flow Tees.
- Full dimensional checks.
- Material certification checks.
- Inspection of radiographs and other NDT results.
- Pressure testing.

Copyright VCS Quality Services Private Limited – All rights reserved

Digitally signed by RACHNA SHUKLA
Date: 2025.03.13 12:53:14 IST

- Surface finish and profile verification at each phase of surface preparation and coating.

Where inspection or testing is to be performed by certified testing laboratories, the Manufacturer shall submit their proposed testing laboratory for approval.

The final inspection, before issue of a release note for the Flow Tees, shall include material certificates, test certificates, surface treatment, dimensional conformity, tagging and packing conformity.

8.0 HYDROSTATIC TESTING

In case factory hydrostatic is specified in the Datasheet, it shall be performed on the completed Flow Tee. Each tee shall be hydrostatically tested at a test pressure as indicated in Data Sheet. The test duration shall be of 15 minutes. No visible leakage or drop in pressure is permitted. After completion of the testing, closure shall be cut off and ends prepared.

9.0 TEST CERTIFICATES

Manufacturer shall submit the following certificates to Company's inspector:

- Test certificates relevant to the chemical analysis and mechanical properties including hardness of the materials used for construction as per this specification and relevant standards.
- Test reports on radiographic, ultrasonic inspection and wet magnetic particle examination.
- Test certificates for each flow tees stating that it is capable of withstanding without leakage a test pressure which results in a hoop stress equivalent to 95% of the specified minimum yield strength for the pipe with which the flow tee is to be attached without impairing its serviceability.
- Test reports on heat treatment carried out as per specification.
- Welding procedures and welder’s qualification reports.
- Certified reports of dimensional tolerances.
- Certified report of painting/coating thickness checks.
- Certificates of all other tests specified in this specification.

All pressure retaining part (Tee and End Pieces) material certification shall be traceable to heat numbers. Certificates shall be available at final inspection in the Manufacturer's works.

10.0 PAINTING, MARKING & SHIPMENT

10.1 All Flow Tees shall be packed and prepared for shipment/transport in with the procedures included in the Material Requisition (MR)/ Tender.

Copyright VCS Quality Services Private Limited – All rights reserved

Digitally signed by RACHNA SHUKLA
Date: 2025.03.13 12:53:14 IST

10.2 The Manufacturer shall supply packing and shipping procedure with the tender.

10.3 After all inspection and tests required have been carried out/witnessed by Company's Inspector, entire surface of flow tees shall be thoroughly cleaned to remove grease, dust and rust and shall be applied with sufficient coats of standard mill coating/corrosion resistant paint, for protection against corrosion during transit and storage. The surface preparation shall be carried out by shot blasting to SP 10 in accordance with "Steel Structures Painting Council - Visual Standard - SSPC-VIS-I".

10.4 All buried flow tees as specified in data sheet shall be coated with 100% solid high build epoxy (minimum 1000-micron thk) or 1.5 mm thick polyurethane coating.

10.5 Manufacturer shall indicate the type of mill coating / corrosion resistant paint used in the drawings submitted for approval.

10.6 Ends of flow tees shall be suitably protected to avoid any damage during transit. Metallic or high impact plastic bevel protectors shall be provided for weld ends of flow tees.

10.7 Flow tees shall be marked with indelible paint with the following data:

- Manufacturer's name
- Nominal diameter of run and branch
- Nominal thickness of run and branch ends
- Material of Construction / Tee and End Piece material and grade
- Test Pressure.
- Year of Manufacture.
- Tag number

11.0 DOCUMENTATION

Documentation to be submitted by Manufacturer to Company is summarized below. Number of Copies (Hard copies / soft copies etc.) shall be as indicated in CONTRACT document.

11.1 At the time of bidding, Bidder shall submit the following documents:

- Reference list of similar supplies including all relevant details viz. Project, Year of supply, Client, Location, Size, Rating and Service for the last five years.
- Records of successful proof test for tees used for fabrication of flow tees, qualifying the range of sizes quoted.

11.2 After placement of order, the Manufacturer shall submit the following drawings, documents and specifications for company's review and information:

- General arrangement drawings of flow tees with overall dimensions and cross-sectional drawing including relevant calculations for pressure containing parts.
- Method of manufacturer, welding procedure and heat treatment details.

Copyright VCS Quality Services Private Limited – All rights reserved

Digitally signed by RACHNA SHUKLA
Date: 2025.03.13 12:53:14 IST

- Quality Control Manual and Quality controls Plans.
- Type of mill coating/anti-corrosion/anti-fouling paint

  Once the approval has been given by the company, any change in design, material and method of manufacturer shall be notified to the company whose approval in writing of all changes shall be obtained before the flow tees are manufactured.

11.3 All documents shall be in English Language.

Copyright VCS Quality Services Private Limited – All rights reserved

Digitally signed by RACHNA SHUKLA
Date: 2025.03.13 12:53:14 IST

ENERGISING QUALITY

VCS QUALITY SERVICES PVT.LTD.

STANDARD SPECIFICATION
FOR
LONG RADIUS BENDS

VCS-SS-PP-2009

Rev. No	Date	Prepared By	Checked By	Approved By	Authorized By
04	28.11.2022	RP	MC	HK	GW
03	04.01.2022	SR	MC	HK	HK

UNCONTROLLED COPY	:	If printed
CONTROLLED COPY	:	If in soft and signed

Copyright VCS Quality Services Private Limited – All rights reserved

Digitally signed by RACHNA SHUKLA
Date: 2025.03.13 12:53:14 IST

REVISION RECORD						
Rev.	**Revision Date**	**Prepared by**	**Checked by**	**Approved by**	**Authorized by**	**Revision Description**
00	23.06.2017					Issued as Standard
		AS	SM	AD	SK	
01	12.06.2019					Re-issued as Standard
		BS	MC	AD	SK	
02	28.01.2020					Document formatting, Doc numbering updated from SS-PL-013 to VPC-SS-PP-2009 & other detail update as marked
		MB	MC	AD	SK	
03	04.01.2022					Revised as marked
		SR	MC	HK	HK	
04	28.11.2022					VCS QMS integration
		RP	MC	HK	GW	

Copyright VCS Quality Services Private Limited – All rights reserved

Digitally signed by RACHNA SHUKLA
Date: 2025.03.13 12:53:14 IST

ABBREVIATIONS:

ASME	American Society of Mechanical Engineers
ASTM	American Society for Testing and Materials
API	American Petroleum Institute
BHN	Brinell hardness number
HAZ	Heat Affected Zone
MSS-SP	Manufacturers Standardization Society - Standard Practice
NB	Nominal Bore
NDT	Non Destructive Testing
OD	Outside Diameter
OLAC	Online Accelerated Cooling
SAW	Submerged Arc Welded
SMYS	Specified Minimum Yield Strength
TMCP	Thermo Mechanical Control Process

Copyright VCS Quality Services Private Limited – All rights reserved

Digitally signed by RACHNA SHUKLA
Date: 2025.03.13 12:53:14 IST

CONTENTS

1.0	SCOPE	5
2.0	REFERENCE DOCUMENTS	5
3.0	MATERIALS	6
4.0	MANUFACTURE	6
5.0	INSPECTION AND TESTS	10
6.0	TEST CERTIFICATES	11
7.0	MARKING, PACKING & SHIPMENT	11
8.0	DOCUMENTATION	12
9.0	BEND MANUFACTURING PROCEDURE QUALIFICATION	13

Copyright VCS Quality Services Private Limited – All rights reserved

Digitally signed by RACHNA SHUKLA
Date: 2025.03.13 12:53:14 IST

1.0 SCOPE

This specification covers minimum requirements for manufacture, testing and supply of long radius bends, made from carbon steel line pipe, for use in onshore pipeline systems handling hydrocarbons in liquid or gaseous phase including Liquefied Petroleum Gas (LPG).

This specification shall be used for fabrication of long radius bends of radii R=6D & R=3D.

2.0 REFERENCE DOCUMENTS

Fabrication, testing and supply of hot induction bends shall comply with the applicable sections of the latest edition (edition in force at the time of issue of enquiry, unless specified otherwise) of the following codes and standards including their addenda.

AMERICAN SOCIETY OF MECHANICAL ENGINEERS (ASME)

B31.4	:	Pipeline Transportation System for Liquids and Slurries
B 31.8	:	Gas Transmission and Distribution Piping Systems.
B16.25	:	Butt Welding Ends.
B16.49	:	Factory-Made wrought Steel Butt welding Induction Bends for transportation and distribution systems.

AMERICAN PETROLEUM INSTITUTE (API)

Specification 5L	:	Specification for Line Pipe.

AMERICAN SOCIETY FOR TESTING AND MATERIALS (ASTM)

A370	:	Standard Test Methods and Definitions for Mechanical Testing of Steel Products.

MANUFACTURERS STANDARDIZATION SOCIETY (MSS)

SP-75	:	Specification for High Test Wrought Butt Welding Fittings.

PNGRB REGULATIONS:

G.S.R 808(E) T4S : Regulations for Natural Gas Pipelines

G.S.R. Infra/ T4S/ P&PPL : Regulations for Petroleum and Petroleum products pipelines

G.S.R. 612(E) T4S : Regulations for CGD Network

Copyright VCS Quality Services Private Limited – All rights reserved

Digitally signed by RACHNA SHUKLA
Date: 2025.03.13 12:53:14 IST

PURCHASER'S SPECIFICATIONS FOR LINE PIPE

VCS-SS-PP-2045	:	Standard Specification for Longitudinal Seam Submerged Arc Welded Line Pipe.
VCS-SS-PP-2036	:	Standard Specification for Seamless Line Pipe
VCS-SS-PP-2008	:	Standard Specification for HFW Line Pipe

In case of conflict between various requirements of this specification and reference standards, codes and regulations mentioned above, more stringent requirement shall apply unless otherwise agreed by Purchaser.

3.0 MATERIALS

Bends shall be fabricated from steel line pipe manufactured in accordance with the latest revision of the Company's Specifications referred in Section 2.0 above. The type of pipe to be used for fabrication of bends shall be as indicated in the Purchase Order. Pipes with positive wall thickness tolerances shall be used for fabrication of bends.

The finished product shall be evaluated for mechanical properties and micro structural stability.

Mechanical testing of test bends performed during the bend manufacturing procedure qualification as per Clause 9.0 of this specification shall ensure that, all bends made according to the Company approved bend manufacturing procedure, have the required mechanical properties. Destructive testing of production bend is not required. However, Company reserves the right to require destructive testing whenever production bending parameters or heat treatment parameters deviate from those established in the Company approved bend manufacturing procedure. However, deviations accepted during pipe production with respect to mechanical properties of line pipe shall be applicable for the bends.

4.0 MANUFACTURE

4.1 GENERAL

Material grade, bend size, bend radius and bend angle shall be as indicated in the Purchase Order/MR /Data sheet. The bending radius for bends shall be either six times the specified outside diameter (R=6D) or three times the specified outside diameter (R=3D), as applicable. The specified bend radius shall be measured at the bend neutral axis.

4.2 MANUFACTURING PROCEDURE

4.2.1 BENDING PROCESS

Bends shall be manufactured by high frequency continuous induction heating and forming method. A minimum of four temperature-monitoring probes shall be in continuous operation throughout all operations. The pipe to be bent shall be cleaned to remove any loose mill scale etc. Once the bending operation has commenced no stoppage shall be permitted until the entire bend has been completed. If bending temperature, bending rate,

Copyright VCS Quality Services Private Limited – All rights reserved

Digitally signed by RACHNA SHUKLA
Date: 2025.03.13 12:53:14 IST

cooling medium volume or heat treatment temperature deviates from the Company approved bend manufacturing procedure, then the bend shall be discarded and another bend shall be made in its place. Cost of such discarded pipes shall be borne by the Manufacturer.

Heat treatment shall be carried out for all finished bends, only in case, it is established during bending procedure qualification that heat treatment is required to meet the specification requirements. Post hot bending heat treatment shall be carried out to the same cycle that the original material received for its production in order to bring the metallurgical condition back to its original state and heat treatment procedure shall be such that the mechanical properties and steel microstructure of the finished bends comply with the minimum requirements specified in the applicable line pipe specification referred under clause 2.0. Heat treatment procedure shall be submitted and prior approval of company shall be obtained on heat treatment procedure.

When Thermo mechanically Control Process (TMCP) and online accelerated Cooling (OLAC) steels are used, specific approval of the proposed heat treatment shall be obtained before bending process is employed. Heat treatment shall be carried out for all finished bends in case it is established during bending procedure qualification that heat treatment is required to meet the specification requirements.

Unless otherwise specified differently in the Purchase Order, the bevels at the ends shall be as per the relevant pipe specification.

4.3 INTERNAL TRANSITIONS

Bends shall have internal transitions at the tangent ends machined to suit the mating pipe in accordance with the specified wall thickness and the requirements of ASME B31.8/B 31.4.

4.4 CIRCUMFERENTIAL JOINTS

Bends shall not have any circumferential joints.

4.5 LOCATION OF WELD SEAM

When bending SAW or High Frequency Welded Pipes, the longitudinal seam shall be located in the plane of minimum deformation or neutral axis. Acceptable tolerance on location of the longitudinal weld seam shall be ± 5°.

4.6 WELD END BEVELS

Unless otherwise specified in Purchase Order, the bevels at the weld ends shall be as per ASME B 31.4/ ASME B 31.8. All cut pipe ends shall be bevelled by machining. The excess weld material at the inside of the bend in case of bends made from SAW pipes, shall be removed over a distance of 100 mm at both ends, but shall not result in reduction of bend wall thickness below the minimum specified wall thickness requirement.

4.7 REPAIRS

No repair by welding is allowed on any part of the bends.

Copyright VCS Quality Services Private Limited – All rights reserved

Digitally signed by RACHNA SHUKLA
Date: 2025.03.13 12:53:14 IST

4.8 DEVIATIONS FROM ORIGINAL CONTOUR

Bulges, dents and flat areas shall not appear within 100 mm of each end of the bend. For the remaining part of these deviations from the original contour of the pipe are permitted provided these deviations do not exceed 2% of nominal outside diameter or 6.0 mm whichever is less. The same shall not extend (in any direction) over a distance of more than 25% of nominal outside diameter of the bend. Dents at the pipe weld seam shall not be acceptable irrespective of the size.

4.9 TANGENT LENGTH

All bends shall be provided with a tangent length at both ends. Tangent length shall be minimum 500 mm or equal to pipe outside diameter whichever is more.

In case, the total length of the bend arc (R=6D) including tangents exceeds one pipe length, tangent length shall be restricted to accommodate complete bend within one pipe length. In no case, tangent length shall be less than 250 mm.

4.10 TOLERANCES

The dimensions of bends shall be controlled to make sure that they are manufactured according to the tolerances indicated below, in addition to the requirements of MSS-SP-75. However, the ends of finished pipe bend shall meet the dimensional tolerances of the relevant pipe specification referred in Clause 2.0.

Following tolerances shall be applicable for Bend Angle and Bend Radius:

- Weld Seam : ± 5°.
- Bend Angle : ± 0.5° from the specified angle.
- Bend Radius : ± 1% of Bending Radius. of bending nominal radius (radius as indicated in Clause 4.1 above
- Wall Thickness : As per (A) below.
- Out of Roundness : As per (B) below.
- Off Plane : As per (C) below.

A. WALL THICKNESS

The Manufacturer shall measure the wall thickness of the pipe before bending along both the inside and outside radii of the bend between and including the start and stop points of the bend arc angle, at intervals approximately equal to pipe diameter or 300 mm whichever is less. The wall thickness shall be measured ultrasonically after bending at the same locations as measured before bending. In addition, the wall thickness of the tangents shall also be measured. These measurements shall be taken at four equally spaced locations around the pipe circumference. The measured wall thickness shall be at least equal to:

Method-1

t_{min} = 0.95 (ta - Δ t).

ta = Actual wall thickness before bending.

Copyright VCS Quality Services Private Limited – All rights reserved

Digitally signed by RACHNA SHUKLA
Date: 2025.03.13 12:53:14 IST

Δ t = 0.35 mm for ta < 10 mm.

= 0.5 mm for ta ≥ 10 mm.

Maximum percentage thinning allowed 10% & 18% for 6D and 3D bends respectively.

Method-2

Wall thinning & minimum thickness required shall be calculated as per BS 8010

More Stringent/ Largest value among above method shall be selected as minimum wall thickness required after bending.

When the pipes are free issue (or thickness of pipes is specified in MR) the thickness of finished bend shall comply with the requirement of 4.10 or as specified in data sheet whichever is higher. When pipes for manufacturing LR bends are to be procured by manufacturer and thickness of finished LR bends is specified in the MR, thickness specified of the bends shall be the minimum thickness achieved after bending with tolerance as (-) 0.0. Manufacturer shall procure pipes to achieve $t_{Min.}$ of LR bends. Higher value of $t_{Min.}$ shall be selected among as described in 4.10 above & as specified in data sheet.

B. **Out of roundness tolerance on the body and ends of the bend shall be as follows:**

Body

Measurements of the outside diameter shall be taken in the plane of the bend at locations where wrinkles are present ($OD_{Max.}$) and at locations where wrinkles are not present (OD_{Min}). Out of roundness shall be considered acceptable, if the value of (($OD_{Max.}$-OD_{Min})/$OD_{Nom.}$) does not exceed 2.0%.

The measurements shall be made over the circumference of the bend either at distances approximately equal to pipe diameter or 300 mm whichever is less. Minimum three measurements shall be taken for each bend.

Ends

Out-of-roundness over a length of 100 mm from the end shall comply with the requirements of relevant company specification referred in Clause 2.0.

In case multiple bends are to be manufactured from single pipe, out of roundness tolerances applicable on pipe body shall be acceptable as end tolerances for bend ends fabricated from original body of line pipe.

C. **Off Plane**

Off-Plane of bends shall not exceed (θ /90) x 10 mm, where θ is the bend angle in degree or the tolerance limit specified in MSS-SP-75, whichever is less. The measurement shall be in accordance with MSS-SP-75.

D. S**quareness**

Bevel and squareness of bend ends shall comply with the requirements of relevant company specification referred in Clause 2.0.

Copyright VCS Quality Services Private Limited – All rights reserved

Digitally signed by RACHNA SHUKLA
Date: 2025.03.13 12:53:14 IST

5.0 INSPECTION AND TESTS

5.1 GENERAL

The manufacturer shall perform all inspection and tests as per the requirements of this specification and MSS-SP-75 prior to shipment, at his Works. Such inspection and tests shall be as a minimum, but not limited to, the following:

- Verify that the unfinished product arriving at Manufacturer's shop is in full compliance with the pipe specification as referred in Clause 2.0 of this specification.
- Visual Inspection.
- Dimensional and tolerances check as per MSS-SP-75 and requirements of Clause 4.0 of this specification.
- Check heat treatment, if carried out, as required and maintain its records.
- Temperature against time recorder charts for each induction heating.
- The non-destructive inspection on the finished bend shall be carried out as given below:
    - All seam welds of bends manufactured from SAW pipes shall be 100% radiographed and seam welds of bends manufactured from HEW pipe shall be 100% ultrasonically tested. The acceptance criteria shall be same as given in applicable pipe specification referred under clause 2.0 of this specification.
    - The full circumference of both ends of each bend after bevelling shall be ultrasonically tested for laminations over a length of 100 mm and acceptance limits shall be as per pipe specification as referred in Clause 2.0 of this specification.
    - The finished bends shall be magnetic particle inspected on the outside and inside radii to include the area encompassed 30 degrees either side of the line passing through the plane of the bend. Acceptance criteria shall be as per ASME Sec. VIII Appendix 6.
- A check shall be performed on each bend by passing a gauging pig consisting of two discs having a diameter equal to 95% of the inside diameter of the pipe, connected rigidly together at a distance equal to 500 mm. Details of the gauging pig, including its dimensions shall be approved by Company.
- When specified in requisition for quotation, all bends shall be subjected to hydrostatic testing at a pressure capable of generating a hoop stress in pipe equal to 95% of Specified Minimum Yield Strength of pipe. Test pressure shall be maintained for a min. of 15 sec.

5.2 Company's Inspector reserves the right to perform stage wise inspection and witness tests on all bends as indicated in Clause 5.1 at Manufacturer's works, prior to shipment.

Manufacturer shall give reasonable notice of time and shall provide without charge reasonable access and facilities required for inspection, to the Company's Inspector. Inspection and tests performed or witnessed by Company's Inspector shall in no way relieve the Manufacturer's obligation to perform the required inspection and tests. Under

Copyright VCS Quality Services Private Limited – All rights reserved

Digitally signed by RACHNA SHUKLA
Date: 2025.03.13 12:53:14 IST

no circumstances any action of the Company's Inspector shall relieve the Manufacturer of his responsibility for the material and quality of the bends.

As a minimum the following stages will be subject to witness/hold/review by the Purchaser's Inspector:

- Bend Manufacturing Procedure Qualification.
- Heat Treatment.
- Destructive Testing of Test Bends.
- Inspection of Radiographs and Other NDT Results.
- Material Certification Checks.
- Full Dimensional Checks.
- Pre-release Inspection.

Where inspection or testing is to be performed by certified testing laboratories, the Manufacturer shall submit their proposed testing laboratory for approval.

The final inspection, before issue of a release note for the Induction Bends, shall include material certificates, test certificates, surface treatment, dimensional conformity, heat treatment, tagging and packing conformity.

6.0 TEST CERTIFICATES

Manufacturer shall submit the following Certificates:

- Test certificates of chemical analysis, mechanical tests, heat treatment, NDT, dimensional inspection and hydrotest carried out on pipe used for fabrication of bend.

  These test certificates are not required when pipe is supplied as free issue by the Company.

- Certificates of non-destructive test/examination carried out on bends.

- Records of heat treatment, if carried out for bends.

- Certified reports of dimensional tolerance of bends.

- Certificates of all other tests as required in this specification.

The Certificates shall be valid only when signed by Company's Inspector. Only those bends which have been certified by Company's Inspector shall be dispatched from Manufacturer's works.

7.0 MARKING, PACKING & SHIPMENT

Packing, shipping and handling of all materials to be in accordance with the instructions in the RFQ and as per following:

- All bends shall be marked as per MSS SP-75.

- All loose and foreign material i.e., rust, grease, etc. shall be removed from inside and outside of the bends prior to packing.

Copyright VCS Quality Services Private Limited – All rights reserved

Digitally signed by RACHNA SHUKLA
Date: 2025.03.13 12:53:14 IST

- A coat of antirust paint shall be applied on the bends for protection during transit and storage. Type of paint shall be as agreed upon with the Company.
- Both ends of all bends shall be suitably protected to avoid any damage during transit by means of metallic or high impact plastic bevel protectors.
- Bends shall be packed / crated or bundled for transportation or shipping to the agreed destination.

Package of bends shall be marked with following:

- Purchaser's Name.
- Order Number.
- Package Number.
- Size (Inches), Wall Thickness (mm)
- Bend Radius (mm).
- Manufacturer's Name and Place of Manufacture.
- Destination of dispatch.
- Any Additionally marking / shipping marks specified in Purchase order/MR.

In addition, each bend shall be paint stencilled with the same information in 25 mm (1 Inch) or larger letters on the inside surface within 150 mm (6 Inch) of each end.

8.0 DOCUMENTATION

Documentation to be submitted by Manufacturer to Company is summarized below. Number of Copies (Hard copies / soft copies etc.) shall be as indicated in CONTRACT document.

8.1 All documents shall be in English language.

8.2 At the time of bidding, bidder shall submit the following documents:

- Reference list of previous supplies of bends of similar specifications.
- Brief description of manufacturing including heat treatment and quality control facilities of the Manufacturer's Works.
- Brief description of manufacturing and quality control facilities of the Manufacturer's works.

8.3 Within two weeks of placement of order, the Manufacturer shall submit bend manufacturing procedure including manufacturing, inspection, testing procedures, quality control manual and quality plans.

The Bend Manufacturing Procedure shall detail the following, as a minimum:

- Sequence of operation

Copyright VCS Quality Services Private Limited – All rights reserved

Digitally signed by RACHNA SHUKLA
Date: 2025.03.13 12:53:14 IST

- Induction forming process including bending temperature, temperature control, bending rate, cooling rate and cooling procedure;
- Temperature measurement and calibration
- Post bend heat treatment procedure including temperature and time.
- Dimensional control procedure
- Pipe material used for bend manufacture
- NDT procedures
- Quality Control and Quality Plans

Upon successful completion of the bend manufacturing procedure qualification as per Clause 9.0 of this specification, Manufacturer shall submit the qualified procedure to Company for approval. Regular production of bends shall commence only after the bend manufacturing procedure has been qualified and approved by Company.

Once the approval has been given by Company any change in material and method of manufacture and quality control shall be notified to Company whose approval in writing of all such changes shall be obtained before the bends are manufactured.

8.4 Within two weeks from the approval date, Manufacturer shall submit to Company the approved drawings, documents and specifications as listed in Clause 8.3 above.

8.5 Prior to shipment, the Manufacturer shall submit test certificates as listed in Clause 6.0 of this specification.

9.0 BEND MANUFACTURING PROCEDURE QUALIFICATION

9.1 Prior to start of production bending, Manufacturer shall demonstrate the suitability of the proposed manufacturing procedures for producing pipe bends including the post-bending heat cycle, that meet the requirements of this specification, by mechanically testing additional bend(s) (test bends). The bending procedure shall be qualified in the presence of Company Representative.

9.2 Test bends shall be made by using the pipe specified in Clause 2.0 of this specification. One test bend is required per 'heat lot' where a heat lot is deemed to include all bends of the same diameter, wall thickness, mill heat number and bend forming parameters such as, bending temperature, bending rate, cooling medium volume & heat treatment temperature (excluding bend angle). In case, line pipes are free issued from multiple heat lots, heat lot having maximum numbers of pipes shall be considered for fabrication of test bend. The test bend shall be bent to an angle of 90°.

9.3 Inspection and Testing of Bends

9.3.1 All finished test bends shall meet the requirement of dimensional tolerances, inspection and non-destructive testing requirements specified in Clause 4.0 and 5.0 of this specification.

9.3.2 In addition, all finished test bends shall be subjected to following mechanical testing to confirm that the bends manufactured meet all mechanical property requirements of

Copyright VCS Quality Services Private Limited – All rights reserved

Digitally signed by RACHNA SHUKLA
Date: 2025.03.13 12:53:14 IST

Company line pipe specifications referred in Section 2.0 of this specification. Test procedure and acceptance criteria shall be in accordance with the Company line pipe specification referred in Section 2.0 of this specification. The test specimen shall be taken from the bent portion of the bend only.

a. Tensile Test

One tensile test shall be conducted on the base material of finished test bend, to establish yield strength, ultimate tensile strength and elongation. The specimen shall be taken longitudinal or transverse to the axis as specified in the relevant pipe specification. In case of bends of 450 mm (18") NB and larger, the specimen shall be taken at inside radius and one at outside radius of the bend.

b. All Weld Tensile Test

In case of bends fabricated from SAW pipes, an all-weld tensile test shall be conducted to establish yield strength, ultimate tensile strength and elongation of weld material on bend.

c. **Guided Bend Test/Reverse Bend Test**

For bends manufactured from SAW pipes one face and one root guided bend test shall be performed. For bends manufactured from HFW pipes, reverse bend test shall be carried out. Test method and acceptance criteria shall be same as given in applicable pipe specification referred under clause 2.0 of this specification.

d. Hardness Test

Hardness testing shall be performed "through thickness" on a test ring removed from the middle of the bend. Four specimens shall be prepared one from each quadrant. In case of bends fabricated from SAW/HFW pipes, one specimen shall the have longitudinal weld seam in the middle. Hardness shall be checked for base metal, weld metal and HAZ. In addition, hardness test shall be performed at spots where dents, bulges or wrinkles have been formed on the bends.

e. Fracture Toughness Test

Charpy-V-notch test temperature shall be the same as specified in the relevant pipe specifications referred in Clause 2.0. Three base material specimens shall be taken longitudinal or transverse to the axis as specified in the relevant pipe specification. In case of bends fabricated from SAW and HFW pipes, three transverse weld material specimens shall be taken with weld in the middle. In case of bends of 450 mm (18") NB and larger, the base material specimens shall be taken at the outside radius of the bend. If multiple thicknesses are involved, testing shall be done on bend with maximum thickness.

f. Hydrostatic test

Bends shall be hydrostatically tested to test pressure that shall result in hoop stress Corresponding to 95% of SMYS of pipe material. Test pressure shall be calculated for minimum allowable thickness. Test pressure shall be held for a minimum period of fifteen (15) seconds.

Should test bends fail to comply with the above requirements, the bend manufacturing procedure shall be disqualified. The Manufacturer shall revise the manufacturing procedure and re-qualify the same at his own cost and time.

Copyright VCS Quality Services Private Limited – All rights reserved

Digitally signed by RACHNA SHUKLA
Date: 2025.03.13 12:53:14 IST

Upon completion of the successful procedure qualification, manufacturer shall provide a written bending procedure for each test bend. The submitted procedure shall indicate in addition to the details as per Clause 8.3, tolerances on various controlling parameters.

Copyright VCS Quality Services Private Limited – All rights reserved

Digitally signed by RACHNA SHUKLA
Date: 2025.03.13 12:53:14 IST

VCS QUALITY SERVICES PVT. LTD.

STANDARD SPECIFICATION
FOR
CONCRETE WEIGHT COATING OF ONSHORE PIPELINES

VCS – SS – PP - 2010

Rev. No	Date	Prepared By	Checked By	Approved By	Authorized By
04	29.04.2022	RP	MC	HK	GW
03	04.01.2022	SR	MC	HK	HK

UNCONTROLLED COPY	:	If printed
CONTROLLED COPY	:	If in soft and signed

Copyright VCS Quality Services Private Limited – All rights reserved

Digitally signed by RACHNA SHUKLA
Date: 2025.03.13 12:53:14 IST

REVISION RECORD						
Rev.	**Revision Date**	**Prepared by**	**Checked by**	**Approved by**	**Authorized by**	**Revision Description**
00	23.06.2017	AS	SM	AD	SK	Issued as Standard Specification
01	21.02.2018	SSS	MC	AD	SK	Document formatting, Cover Page, Doc numbering updated from SS-PL-005 to VPC-SS-PL-0005)
02	28.01.2020	MB	MC	AD	SK	Document numbering updated from VPC-SS-PL-0005 to VPC-SS-PP-2010
03	04.01.2022	SR	MC	HK	HK	Revised as Marked
04	29.04.2022	RP	MC	HK	GW	VCS QMS Integration

Copyright VCS Quality Services Private Limited – All rights reserved

Digitally signed by RACHNA SHUKLA
Date: 2025.03.13 12:53:14 IST

ABBREVIATIONS:

ASME	American Society of Mechanical Engineers
ASTM	American Society of Testing of Materials
API	American Petroleum Institute
OISD	Oil Industry Safety Directorate
IS	Indian Standard

Copyright VCS Quality Services Private Limited – All rights reserved

Digitally signed by RACHNA SHUKLA
Date: 2025.03.13 12:53:14 IST

CONTENTS

1.0 SCOPE 5
2.0 GENERAL REQUIREMENT 5
3.0 REFERENCE DOCUMENTS 5
4.0 MATERIALS 6
5.0 DESIGN REQUIREMENTS 7
6.0 CONSTRUCTION REQUIREMENTS 8
7.0 PROCEDURE QUALIFICATION 10
8.0 APPLICATION OF REINFORCEMENT AND CONCRETE COATING 11
9.0 TOLERANCES 13
10.0 WEIGHING 13
11.0 COATING OF FIELD WELDS 13
12.0 INSPECTION AND TESTS 14
13.0 REPAIRS 14
14.0 MARKING 15
15.0 HANDLING, UNLOADING, STORING AND TRANSPORTATION 15

Copyright VCS Quality Services Private Limited – All rights reserved

Digitally signed by RACHNA SHUKLA
Date: 2025.03.13 12:53:14 IST

1.0 SCOPE

1.1 This specification covers the minimum requirements for the materials, application, inspection, handling and other activities for external concrete weight coating of pipelines.

1.2 This specification shall be read in conjunction with the conditions of all specifications and documents included in the Contract between Company and Contractor.

2.0 GENERAL REQUIREMENT

Contractor shall execute the work in compliance with all laws, by-laws, ordinances, regulation, etc. and shall provide all services and labor, inclusive of supervision thereof, materials, equipment, appliances or other things of whatsoever nature required in or about the execution of the work.

For the purpose of this specification the following definitions apply:

Words 'Shall' and 'Must' where used indicate that a provision is mandatory.

Words 'Should' and 'Will' where used indicate that a provision is not mandatory but is recommended as good practice.

3.0 REFERENCE DOCUMENTS

The latest Edition (edition in force at the time of floating the enquiry) of following Codes and Standards are referenced in this specification and all provisions of these reference codes and standards shall be applicable.

ASTM A-82 : Specification for Steel Wire, Plain, for concrete Reinforcement.

ASTM A-185 : Specification for Steel Welded Wire Fabric, Plain, for Concrete Reinforcement

ASTM A-641 : Specification for Zinc Coated (Galvanized) Carbon Steel wire

ASTM C-39 : Test Method for Compressive strength of cylindrical concrete specimens.

ASTM C-138 : Test Method for Unit weight, Yield and Air Content of Concrete.

ASTM C-309 : Specification for Liquid Membrane Forming Compounds for Curing Concrete.

ASTM C-642 : Test Method for Specific Gravity, Absorption and Voids in Hardened Concrete

INDIAN STANDARD (IS)

IS-269 : Indian Standard Specification for Ordinary Portland Cement

IS-516 : Method of Test for Strength of concrete.

IS-383 : Indian Standard Specification for Coarse and Fine Aggregates from

Copyright VCS Quality Services Private Limited – All rights reserved

Digitally signed by RACHNA SHUKLA
Date: 2025.03.13 12:53:14 IST

Natural Sources for Concrete.

IS-1199 : Method of Sampling and Analysis of Concrete.

IS-8041 : Indian Standard Specification for Rapid Hardening Ordinary Portland Cement

IS-8112 : Indian Standard Specification for 43 Grade Ordinary Portland Cement

IS-2386 (Parts-I: Indian Standard Methods of Test for Aggregates for Concrete.

thru' VIII)

IS-12269 : Indian Standard Specification for 53 Grade Ordinary Portland Cement.

In case of conflict between various requirements of this specification and reference codes, standards and specifications mentioned above, more stringent requirement shall apply.

4.0 MATERIALS

4.1 The Contractor shall supply necessary materials for application of concrete coating on line pipe duly applied with external corrosion coating.

Materials which in the opinion of Company, do not comply with the appropriate specifications shall be rejected and immediately removed from site by Contractor at his expense.

Material shall comply with following requirements:

4.2 CEMENT

Portland cement (conforming to IS-12269), or High Strength Ordinary Portland Cement (conforming to IS-8112) shall be used. Cement which has hardened or partially set or which has become lumpy shall not be used. Test certificates from the cement Manufacturer shall be supplied to the Company for all cement delivered to site.

In case concrete weight coating is to be provided at locations affected by sea water tidal flats etc., Portland cement in accordance with ASTM C-150 Type III or IS-8041 shall be used.

4.3 AGGREGATES

Aggregates shall comply with the requirements of IS: 383 and shall be tested in accordance with IS: 2386.

- **Fine Aggregates**

Fine Aggregates shall mean any of the following, as defined in IS: 383:

- Natural sand;

Copyright VCS Quality Services Private Limited – All rights reserved

Digitally signed by RACHNA SHUKLA
Date: 2025.03.13 12:53:14 IST

- Crushed stone sand;
- Crushed gravel sand.

Sand shall be well-graded from fine to coarse in accordance with Table 4 of IS: 383.

- **Coarse Aggregates**

Use of coarse aggregates shall be subject to Company approval.

Aggregates (Fine and Coarse) shall be clean and free from injurious amounts of salt, alkali, deleterious substances or organic impurities.

4.4 WATER

The water used shall be fresh and clean and shall be free from injurious amounts of oils, acids, alkalis, salts, sugar, organic materials or other substances that may be deleterious to concrete or steel. It shall not contain chlorides, sulphates, and magnesium salts. Water from each source shall be tested prior to its use and shall be approved by Company. Seawater or contaminated water shall not be used. Water from doubtful sources shall be tested by the Contractor at his expense and approved by Company before use.

4.5 REINFORCEMENT

Concrete coating shall be reinforced by a layer or layers of steel reinforcement according to the provisions hereinafter described.

- Reinforcement shall consist of welded steel wire fabric manufactured in flat sheets or in rolls (ribbon mesh) and shall conform ASTM A-185. Wires shall conform to ASTM A-82.

- Steel wire shall be galvanized at finished size as per ASTM A-641. The diameter of the wire and spacing of wires (mesh dimensions) shall be selected according to the following criteria.

- Wire fabric manufactured in flat sheets shall be 2 x 4 inches max. Steel wire mesh, 13 gauge U.S. Steel wire (2.4 mm) min. each way.

- Wire fabric manufactured in rolls (ribbon mesh) shall be 1 x 2.5 inches of 14 gauge U.S. Steel wires (2mm wire). The above dimensions will be applied unless otherwise specified by designs. As a rule wire fabric (sheets) shall be used when concrete coating is applied by casting method, while ribbon mesh (rolls) shall be used when concrete coating is applied by impingement method.

5.0 DESIGN REQUIREMENTS

Pipes shall be concrete coated to a thickness as specified in the drawings and documents.

The concrete unit weight shall be minimum 2245 kg/m³ (140 pounds per cubic foot)

The compressive strength shall not be less than 200 kg/cm² in 28 days and 165 kg/cm² in 7 days.

Copyright VCS Quality Services Private Limited – All rights reserved

Digitally signed by RACHNA SHUKLA
Date: 2025.03.13 12:53:14 IST

Concrete coating shape shall be circular and concentric to pipe outside diameter. Other concrete coating shapes are not acceptable.

Contractor shall be permitted to select any proportioning of materials to achieve the specified requirements of concrete density and weight.

6.0 CONSTRUCTION REQUIREMENTS

6.1 APPLICATION METHOD

Concrete coating shall be applied either using casting or impingement method. Any alteration or modifications to the methods described in this specification shall be submitted to the Company for approval. The application method shall however ensure the basic characteristics of concrete coating in compliance with the minimum requirements of this specification.

Concrete coating shape shall be circular and concentric to pipe outside diameter. Other concrete coating shapes are not acceptable.

Contractor shall submit to the Company, one month prior to commencement of work, the procedure/ method of application for approval.

Wherever practical, the total thickness of coating shall be applied in a single pass.

6.2 QUALIFICATION TESTING OF CONCRETE MIX

Before commencement of the work, Contractor shall perform all tests, either in laboratory or in field and trials necessary to properly select type of mix which meets the requirements of relevant section of this specification.

The Correct combination of the cement, aggregates and water which results in the desired properties of concrete shall be determined for each mix.

Following shall be recorded:

- Proportion and weights of the respective materials used.
- The water/ cement ratio.
- The grading of the aggregates.

Samples shall be prepared and tested in accordance with ASTM C-642 to determine the dry specific gravity of the concrete.

In parallel, test according to ASTM C-138 shall be performed so as to determine the expected correlation between concrete weight after placing and dry specific gravity (28 days after placing).

Test for concrete specific gravity at Intermediate time (7 days after coating) shall be performed.

When the results of the above tests do not meet the requirements, the mix shall be modified and concrete samples tested until a proper mix has been determined.

The mix so determined, shall then be used for sampling of concrete to be

Copyright VCS Quality Services Private Limited – All rights reserved

Digitally signed by RACHNA SHUKLA
Date: 2025.03.13 12:53:14 IST

submitted to compressive strength tests as per ASTM C39.

Frequency of sampling for tests for density and compressive strength of concrete shall be as follows:

"Quantity" of Concrete in the Work (m³)	Number of samples
Up to 25	3
26 to50	4
51 and above	4
	Plus one additional sample for each additional 50 m³ or part thereof

Quantity means the volume of concrete to be used for each qualified mix.

6.3 EQUIPMENT

The equipment used for performing the concrete coating shall be capable of doing so with a required degree of uniformity with respect to thickness, density and strength. The proportioning equipment and procedure shall be of the type to assure consistently proportioned material by weight. Concrete shall be mixed in a mechanical mixer, which shall ensure thorough mixing of all materials. Any equipment that tends to separate the ingredients shall not be used. Any equipment that tends to separate the ingredients shall not be used. Ready mixed concrete supplied by ready-mixed concrete plant shall be preferred.

6.4 MEASUREMENTS AND LOGGING

All measurements as mentioned below shall be taken during the work stages and clearly logged in a proper logbook. A special logbook shall be used for recording tests results. A logbook shall refer to pipe lengths having the same nominal diameter, and steel wall thickness.

The following shall be subject to measurement and logging for each pipe length.

A LINE PIPE

1 Pipe number
2 Thickness
3 Length
4 Weight
5 Outside diameter

B. CORROSION COATING

6 Type of coating
7 Thickness of corrosion coating, mm
8 Weight of coated pipe, kg

C. CONCRETE COATING

10 Batch identification number
11 Date of placing the concrete coating
12 Average concrete coating thickness, mm

Copyright VCS Quality Services Private Limited – All rights reserved

Digitally signed by RACHNA SHUKLA
Date: 2025.03.13 12:53:14 IST

13 "Dry Weight" of concrete coated pipe (Weight and date of weighing or Related Weight 28 days after placing of concrete and so identifiable)

14 "Unit dry weight" of concrete coated pipe

15 "Negative Buoyancy" (unit) of concrete Coated pipe

No concrete placing shall be allowed before items 1 through 9 listed at clause A, B, have been logged.

7.0 PROCEDURE QUALIFICATION

Before commencement of the work, Contractor shall perform all tests, either in laboratory or in field and trials necessary to properly select type of mix, which meets the requirements of this specification.

The type of mix, i.e. the correct combination of the cement, aggregates and water which results in the desired properties of concrete shall be at first determined for each mix and following shall be accurately checked and recorded:

- Proportion and weights of the respective materials used;
- The water/cement ratio;
- The grading of the aggregates.

Samples shall be prepared and tested in accordance with ASTM C-642 to determine the dry specific gravity of the concrete. In parallel, test according to ASTM C-138 shall be performed so as to determine the expected correlation between concrete weight after placing and dry specific gravity (28 days after placing). Test for concrete specific gravity at Intermediate time (7 days after coating) shall be performed.

When the results of the above tests do not meet the requirements, the mix shall be modified and concrete samples tested until a proper mix has been determined.

The mix so determined, shall then be used for sampling of concrete to be submitted to compressive strength tests as per ASTM C39 or IS-516.

Frequency of sampling for tests for density and compressive strength of concrete shall be as follows:

"Quantity" of Concrete in the Work (m 3)	**Number of samples**
Upto 25	3
26 to 50	4
51 and above	4 plus one additional sample for each additional 50 m3 or part thereof

Copyright VCS Quality Services Private Limited – All rights reserved

Digitally signed by RACHNA SHUKLA
Date: 2025.03.13 12:53:14 IST

Quantity' means the volume of concrete to be used for each qualified mix.

8.0 APPLICATION OF REINFORCEMENT AND CONCRETE COATING

8.1 PIPE LENGTH PREPARATION

Prior to placing of reinforcement, the anti-corrosion coating of each pipe length shall be carefully inspected visually and by holiday detectors and, if damages are found, they shall be repaired in accordance with the relevant specification, before start of the work. Foreign matters, if any, shall be removed from the surface of the protective coating.

8.2 PLACEMENT OF REINFORCEMENT

- Reinforcement shall be placed around the pipe in such a way as to cover the whole pipe length or sections to be concrete coated. The reinforcement shall not protrude beyond the concrete coating ends.

- Reinforcement shall rest on synthetic resin spacers forming a "Crown" whose number shall be such as to avoid any contact with the pipe's protective coating. Spacing between the two consecutive "crown" centers shall be 500 to 1000 mm.

- Splices and attachments shall be done by binding with steel wire having 1.5 mm diameter. Circular and longitudinal joints of wire fabric in sheets shall be lapped at least for one mesh. When wire fabric in rolls (ribbon mesh) is used, the spiral lap shall be one mesh while and spliced lap shall be three meshes.

- One layer of reinforcement steel shall be provided for concrete thickness less than 50 mm. The reinforcing steel shall be embedded approximately midway in the concrete coating thickness. For concrete thickness 50 mm and above two layers of reinforcing steel shall be provided. If application method requires more than one pass concrete, one reinforcement layer for each pass is to be applied independently from concrete coating thickness.

  In case of one layer of reinforcement, it shall be located approximately in the middle of the concrete thickness. In case of two layers of reinforcement, layers shall be located at 1/3rd and 2/3rd of the concrete thickness. In case of three layers of reinforcement, layer shall be located at 1/4th, 1/2 and 3/4th of concrete thickness. Contractor shall demonstrate that the procedure used ensures no physical contract between steel reinforcement and the pipe and the reinforcement is placed in position as mentioned above.

8.3 CONCRETE PLACING

- Concrete shall be placed within a maximum of 30 minutes from the time of mixing (i.e. after adding water to mix) and shall be handled in such a way so as to prevent aggregate segregation and excessive moisture loss. Concrete containers shall continuously be kept clean and free from hardened or partially hardened concrete.

- The moisture content of the aggregates used shall be such as to maintain a satisfactory control on the water/ cement ratio of the concrete mix.

Copyright VCS Quality Services Private Limited – All rights reserved

Digitally signed by RACHNA SHUKLA
Date: 2025.03.13 12:53:14 IST

To maintain the water/ cement ratio constant at its correct value, determination of moisture contents in both fine and coarse (if used) aggregates shall be made as frequently as possible, the frequency for a given job being determined by the Company Representative according to weather conditions.

- If casting method is used, once reinforcement and mould have been applied around the pipe, concrete mixture shall be poured through an opening on the upper section of the same mould. Concrete shall not be deposited from a height greater than 1 meter. During pouring of concrete, vibrator sets applied inside of pipe or outside the mould shall vibrate the mix so as to obtain the best possible compactness.

- If impingement method is used, placement of concrete shall be up to the specified thickness in one continuous course, allowance being made for splices of reinforcement and providing reinforcement in the right location. Concrete shall be projected at high velocity against the external surface of pipe, to produce a hard, tight-adhering coating of the specified thickness.

- No casting shall be interrupted or passes shall be stopped for more than 30 minutes. Before placing fresh concrete against the joint, the contact surfaces shall be carefully cleaned and wetted to obtain a good bond between the fresh material and the previously placed material.

- Suitable means shall be provided to ensure that the temperature of the concrete, when placed, does not exceed 32°C.

- All pipes shall be kept clean and free from cement concrete and grout either inside or outside of the uncoated sections.

- Bevel protectors shall be kept in place throughout the coating application and after.

- The coating at each end of the pipe shall be bevelled to a slope of approximately two-to-one. (2:1). It shall terminate about 50 mm short of the end of the corrosion coating applied on the pipe surface.

8.4 CURING

- Immediately after concreting, the exposed surfaces of the concrete shall be protected during hardening from the effects of sunshine, drying winds, rain, etc. and then after the initial set has taken place; the concrete coating shall be properly cured. The coated pipe sections shall be handled gently by suitable means to prevent undue distortion.

- Curing shall be performed by application of an approved curing membrane using sealing compounds and shall meet the requirements of ASTM C-309. The material shall be stored, prepared and applied in strict conformity with the instructions of the Manufacturer. The ingredients of any such compound shall be non-toxic and non-inflammable and shall not react with any ingredient of the concrete, the reinforcement, protective coating or pipe. The application of the curing compound shall take place immediately after the coating is completed and preferably before the pipe is removed from the concrete coating apparatus. The surface of the

Copyright VCS Quality Services Private Limited – All rights reserved

Digitally signed by RACHNA SHUKLA
Date: 2025.03.13 12:53:14 IST

concrete shall be lightly sprayed with water before applying the curing compound. The membrane curing period shall not be less than 4 days, during which period the freshly coated pipes shall not be disturbed. The pipe surface shall be kept wet during daylight hours for seven days after application of the concrete coating. The concrete coating shall not be allowed to dehydrate.

Curing of concrete coating may also be done by using jute bags, provided continuous wetting is ensured by the Contractor.

- Before handling and hauling the concrete coated pipes, a check shall be made to make sure that the concrete coating is properly cured. Stacking and transportation of the coated pipe shall be initiated only after seven days provided that the concrete coating suffers no damage.

9.0 TOLERANCES

9.1 Contractor shall maintain a surface tolerance of 8 mm (5/16") maximum for the radial distance between high and low areas of the surfaces. The diameter of each coated pipe shall be obtained at three (3) or more points, spaced at equal intervals between the end points.

9.2 The acceptable weight tolerance for any single pipe shall be limited to plus five (5) or minus two (2) percent of the calculated theoretical weight. The theoretical weight shall be calculated using total weight of the pipe with concrete and corrosion coating.

10.0 WEIGHING

10.1 The test specimen shall be selected at equal intervals during the course of production.

10.2 Contractor shall weigh each pipe when dry prior to transportation and 28 days after placing of concrete and mark the weight with paint on the inside of the pipe. The weight mark shall be followed with letters "DW" meaning Dry Weight.

10.3 The acceptable weight tolerance of any single pipe shall be limited to +5% or -2% of the calculated weight of concrete. Calculated weight shall consider only the weight of concrete coating based on approved concrete density and thickness.

In case Contractor opts not to weigh the pipes, the Contractor shall provide 20% extra concrete coating thickness over the specified concrete thickness at no extra cost and time to Company.

11.0 COATING OF FIELD WELDS

The Contractor shall coat the uncoated pipe surface at field welds in accordance with methods approved by Company. Contractor shall submit a detailed procedure for joint coating for Company's approval.

The reinforcement for the field welds shall be same as that for line pipe coating with the same number of layers and the same space between layers as for the existing coating. The edges of this netting must be carefully secured with galvanized wire to the reinforcement extending from the existing coating.

Copyright VCS Quality Services Private Limited – All rights reserved

Digitally signed by RACHNA SHUKLA
Date: 2025.03.13 12:53:14 IST

The reinforcement shall not make direct or electrical contact with the pipe.

Synthetic resin spacer blocks may be used to keep the reinforcement free from the pipe coating. The moulds used for applying the concrete coating shall be supplied by the Contractor. The composition of the concrete shall be the same as that of the concrete coating of the pipe.

When using moulds, the Contractor shall prevent air being trapped by applying mechanical vibrators or by striking the outside of the moulds with sticks.

If the moulds remain around the pipe, e.g., in the case of submerged pipes floated into position, the Contractor shall take appropriate measures to prevent too much water entering the mould. After the mould has been filled with concrete the filling opening must also be closed off by clamping a strip to burlap under the sealing cover.

12.0 INSPECTION AND TESTS

12.1 Before application of concrete, two test cubes each per day shall be obtained from batches and tested at the end of 7 days after curing, for compressive strength and specific gravity.

12.2 After curing, every length of concrete coated pipe shall be non-destructively tested by means such as "ringing" to determine if any suspected defects are present. In case this indicates faulty coating, cores shall be removed from coating and inspected. When defective coating appears from cores, the concrete costing shall be removed from the pipe lengths.

12.3 Every length of concrete coated pipe shall be checked to verify insulation between steel reinforcement and pipe by means of a megger or equivalent device. To this purpose provisions should be made during placing of concrete such as to leave at least a point of exposed steel reinforcement whenever the latter shall terminate inside of concrete coating.

12.4 During the tests as per clause 11.3 above, and before transporting of concrete coated pipes, every pipe length shall be visually inspected to detect whether any damages and/ or defects are present. Possible damages and/ or defects with their allowable limits are described at following clause 12.0. Repairable concrete coatings shall be clearly marked while the non-repairable once shall be removed from the pipe lengths.

13.0 REPAIRS

The following repairs are permitted to coating due to unavoidable damage in handling and in storage (This applies only to concrete that has hardened).

13.1 Spalling due to compression or shearing caused by impact against other objects. Spalling is defined as damage, which causes a loss in concrete of more than 25 % of the total thickness of the coating at the point of damage.

13.2 Damage due to spalling of an area of less than 0.1 m² (1 square foot) where the remaining concrete is sound and reinforcement steel is not exposed, will be accepted without repairs.

Copyright VCS Quality Services Private Limited – All rights reserved

Digitally signed by RACHNA SHUKLA
Date: 2025.03.13 12:53:14 IST

13.3 Damage due to spalling of an area of less than 0.1 m² with reinforcement exposed; and area more than 0.1 m² and less than 0.3 m² shall have the concrete remaining in place over that area removed as necessary to expose the reinforcing steel throughout the damaged area. Edges of the spalled area shall be under-cut so as to provide a key lock for the repair material. A stiff mixture of cement, water and aggregate shall be trowelled into and through the reinforcement and built up until the surface is level with the coating around the repair. The pipe shall then be carefully laid with the repaired area at the top and shall be moist cured for a minimum of thirty six (36) hours before further handling.

13.4 Should the damaged area be more than 0.3 m², coating shall be removed around the entire damaged area. A repair shall be made by satisfactorily restoring the reinforcement, forming the area with a metal form and pouring a complete replacement of materials similar to that from which the coating was made. The mixture shall be one (1) part of cement to three (3) parts of aggregate and the necessary water to produce a slump not to exceed 100 mm (four inches). The resulting coating shall be equal in weight, density, uniformity, thickness, strength and characteristics to the originally applied coating. The pipe shall then be carefully laid in a position where it shall be allowed to remain for a minimum of 36 hours before further handling.

14.0 MARKING

14.1 Every concrete coated pipe length shall be clearly marked by a suitable type of paint. Markings of concrete coating shall be made inside of pipe close to bevel end, in such a way that the area involved by welding operations is not affected by paint.

14.2 For each concrete coated pipe length, at one of the two ends, the field identification number and the date of concrete placing shall be marked, while the dry as well as the wet weight along with number of days after coating shall be marked at the other end.

In addition, Contractor shall develop a colour coding (band) system to be marked on the outside surface for easy identification of the coated pipe for each concrete coating thickness, concrete density, pipe diameter, pipe thickness and pipe material variation.

15.0 HANDLING, UNLOADING, STORING AND TRANSPORTATION

15.1 Once the pipe sections have been taken on charge, the Contractor, complying with provisions of the contract, shall execute their transport together with other material, either supplied by him or by the Company, from the site of receipt to the coating yard and after concrete coating completion and acceptance, to delivery point at laying field or storage areas as previously established providing each time the necessary storages.

15.2 Materials other than pipes and which are susceptible of deteriorating or suffering from damages especially due to humidity or other adverse weather conditions, shall be suitably stored and protected.

Copyright VCS Quality Services Private Limited – All rights reserved

Digitally signed by RACHNA SHUKLA
Date: 2025.03.13 12:53:14 IST

15.3 During loading, transport, unloading and hauling of inert aggregates, any contact and mixing with mud, earth, grease and any other foreign material shall be carefully avoided. Precautions shall be taken to prevent contamination, to maintain the cleanliness and against effects of hot or cold weather or other adverse climatological condition.

15.4 During the operations of loading, unloading and stock-piling, the pipe sections shall be handled in such a way so as to avoid dents, cuts, cracks and other damages especially at beveled ends or damages to protective and/ or concrete coating.

15.5 Stacks shall consist of a limited number of layers such that the pressure exercised by the pipes own weight does not cause damage to coating. Stacking with more number of layers shall be agreed upon with the Company provided that each pipe section is separated by means of spacers suitably spaced so as to avoid stresses and compressed points of contact on the coated surfaces.

Copyright VCS Quality Services Private Limited – All rights reserved

Digitally signed by RACHNA SHUKLA
Date: 2025.03.13 12:53:14 IST

ENERGISING QUALITY

VCS QUALITY SERVICES PVT. LTD.

STANDARD SPECIFICATION

FOR
FIELD JOINT COATING

VCS – SS – PP - 2012

REV. No	DATE	Purpose	Prepared By	Checked By	Approved By
02	29.04.2022	VCS QMS Integration	RP	MC	HK
01	06.03.2020	RE-ISSUED AS STANDARD	MD	SK	SK

Digitally signed by RACHNA SHUKLA
Date: 2025.03.13 12:53:14 IST

REVISION RECORD

Rev.	Revision Date	Prepared by	Checked by	Approved by	Authorized by	Revision Description
00	23.06.2017					Issued as Standard Specification
		AS	SM	AD	SK	
01	06.03.2020					Document formatting, Cover Page, Doc numbering updated from SS-PL-009 to VPC-SS-PP-2012)
		MB	MD	AD	SK	
02	29.04.2022					VCS QMS Integration
		RP	MC	HK	GW	

Copyright VCS Quality Services Private Limited – All rights reserved

Digitally signed by RACHNA SHUKLA
Date: 2025.03.13 12:53:14 IST

ABBREVIATIONS:

ASME	American Society of Mechanical Engineers
ASTM	American Society of Testing of Materials
API	American Petroleum Institute
OISD	Oil Industry Safety Directorate

Copyright VCS Quality Services Private Limited – All rights reserved

Digitally signed by RACHNA SHUKLA
Date: 2025.03.13 12:53:14 IST

CONTENTS

1.0 SCOPE 5

2.0 REFERENCE DOCUMENTS 5

3.0 MATERIAL AND EQUIPMENT 6

4.0 HEAT SHRINK WRAPROUND SLEEVE SYSTEM PRE-QUALIFICATION 9

5.0 HEAT SHRINK WRAPROUND SLEEVE APPLICATION 8

6.0 INSPECTION AND TESTING 11

7.0 REPAIRS 13

8.0 DOCUMENTATION 13

Copyright VCS Quality Services Private Limited – All rights reserved

Digitally signed by RACHNA SHUKLA
Date: 2025.03.13 12:53:14 IST

1.0 SCOPE

This specification covers the minimum requirements of materials, equipment, application and inspection/ testing of the field joint anti-corrosion coating. This specification shall be applicable for buried onshore factory coated pipelines with either three layer polyethylene or fusion bonded epoxy coating by heat shrink wraparound sleeves.

The heat shrink wraparound sleeve shall conform to DIN EN 12068 and the requirements of this specification. Unless modified/ replaced by this specification, all requirements of DIN EN 12068 shall remain fully applicable and be complied with.

This specification shall be read in conjunction with the conditions of all specifications and documents included in the Contract between Company and Contractor. Unless specified otherwise, all sections of this specification shall apply to all specifications referred in this specification.

2.0 REFERENCE DOCUMENTS

The design, materials, fabrication, inspection, testing and supply of heat shrink sleeve shall comply with the latest edition of the following codes and standards.

AMERICAN SOCIETY OF TESTING OF MATERIALS (ASTM)

D – 149	:	Standard Test Methods of Dielectric Breakdown voltage and Dielectric strength of solid electrical insulating materials of commercial frequencies.
D - 257	:	Standard Test Method of D-C Resistance or conductance of insulating material
D – 570	:	Standard Method of Test for Water Absorption of Plastics.

INTERNATIONAL ORGANISATION FOR STANDARDIZATION (ISO)

ISO 8502 – 3	:	Preparation of Steel Substrates before Application of Paints and Related Products – Part 3 – Assessment of Dust on Steel Surfaces Prepared for Painting (Pressure Sensitive Tape Method)
ISO 8503-1	:	Part 1: Specification and definitions for ISO surface profile comparator for the assessment of abrasive blast clean surfaces.
ISO 8503-4	:	Part 4: Methods for calibration of ISO surface profile comparator and for the determination of surface profile – Stylus instrument procedure

OTHER STANDARDS

DIN EN 12068	:	Cathodic Protection – External organic coatings for the corrosion protection of buried or immersed steel pipelines used in conjunction with cathodic protection-tapes and shrinkable materials
SSPC-SP1	:	Steel Structure Painting Council

COMPANY STANDARD SPECIFICATIONS

Copyright VCS Quality Services Private Limited – All rights reserved

Digitally signed by RACHNA SHUKLA
Date: 2025.03.13 12:53:14 IST

Following Company specifications shall form integral part of this specification and shall be complied with when applicable to the works covered in the contract.

VPC-SS-PP-2003 Standard Specification for 3-Layer polyethylene coating of Line Pipes

In case of conflict between various requirements of this specification and reference standards mentioned above, more stringent requirement shall apply unless otherwise agreed by Purchaser.

3.0 MATERIAL AND EQUIPMENT

3.1 GENERAL REQUIREMENTS

Field joint anti-corrosion coating material shall be e heat shrinkable wraparound sleeve suitable for a maximum operating temperature of (+) 60°C ($T_{Max.}$) and shall conform to designation EN 12068 - C HT 60 UV. In addition, the field joint anti-corrosion coating shall comply the requirements specified in para 3.2 of this specification.

3.1.1 HEAT SHRINKABLE WRAPAROUND SLEEVES

Heat shrinkable wraparound sleeve shall consist of radiation cross-linked, thermally stabilized, ultraviolet resistant semi-rigid polyolefin backing with a uniform thickness of high shear' strength thermoplastic/ co-polymer hot melt adhesive. The joint coating system shall consist of a solvent free epoxy primer applied to the pipe surface prior to sleeve application.

The total thickness of heat shrinkable wraparound sleeve in the as applied condition shall be as follows:

Pipe Size (Specified Outside Diameter)	Thickness (mm)	
	On Pipe Body (Min.)	On Weld Bead (Min.)
< 4″	2.5	2.0
4″ – 10″	2.5	2.0
12″ – 18″	2.8	2.2
20″ – 30″	3.0	2.4
≥32"	3.3	2.6

The heat shrink wraparound sleeve shall have the required adhesive properties when applied on various commercial pipe-coating materials. The pre-heat and application temperatures required for the application of the shrink sleeve shall not cause loss of functional properties of the pipe coating.

The Contractor shall propose the Manufacturer's details, HSS details/ Properties and the specific grade of field joint coating system meeting the requirements of this specification. Contractor shall propose only those coating systems that have been previously used for completed pipeline projects of same or higher size than the size indicated in tender, for a length of 50 km and above in a single project for similar operating conditions.

3.1.2 OTHER REQUIREMENTS

Copyright VCS Quality Services Private Limited – All rights reserved

Digitally signed by RACHNA SHUKLA
Date: 2025.03.13 12:53:14 IST

The backing material shall be provided with either dimple or other means to indicate that the desired heat during shrinking in the field is attained.

The heat shrink wraparound sleeve shall be of a size such that a minimum overlap of 50 mm is ensured (after shrinking) on both sides of the yard applied corrosion coating of pipes. The sleeve shall be supplied in pre-cut sizes to suit the pipe diameter and the specified overlap requirement.

In the cases where carrier pipe is installed by direct boring/ jacking, the overlap on the mill, coating for the leading edges of the joints shall be minimum 200 mm. When this extra overlap is achieved by providing an additional patch of heat shrink tape/ wraparound, it shall be applied in such a manner that the square edge of the patch on the joint coating is in the direction opposite to the direction of boring/ jacking.

The pre-heat and application temperatures required for the application of the shrink sleeves shall not result in any damage to the applied mainline coating.

The Contractor shall obtain prior approval from Company regarding the Manufacturer of the field joint coating and the specific grade of the joint coating system proposed. Complete details along with test certificates shall be submitted to Company for this purpose. The said test certificate shall be from an independent DIN recognized/ approved laboratory for all the properties required for the specified EN designation of the field joint coating and the requirements of this specification.

3.2 PROPERTIES OF BACKING

Property of PE backing used as a part of heat shrink wraparound sleeve system shall comply the following:

S No	Property	Test Condition	Unit	Requirement	Test Method
a	Tensile Strength	(+)25°C	N/mm2	12 min.	DIN EN 12068
b	Ultimate Elongation	(+) 25°C	%	250 min.	DIN EN 12068
c	Dielectric withstand	1000 volts/sec	KV	30 min.	ASTM D 149
d	Volume Resistivity	(+) 25°C	Ohm-cm	1015 min.	ASTM D 257
e	Water Absorption	(+)25°C for 24 hrs.	%	0.05 max.	ASTM D 570

3.3 INSTALLED FIELD JOINT COATING PROPERTIES

As applied field joint coating system shall comply the requirements of DIN EN 12068, Table 1 and 2 corresponding to designation DIN EN 12068-C HT 60 UV, except as modified below:

- Cathodic Disbandment Resistance at T_{Max} i.e. 60°C shall be 20 mm when tested as per Annexure K of DIN EN 12068. Test shall be carried out at (+) 60° C .
- Peel Strength shall be as follows:

Copyright VCS Quality Services Private Limited – All rights reserved

Digitally signed by RACHNA SHUKLA
Date: 2025.03.13 12:53:14 IST

Peel Strength		Units	Required for Mech. Resistance Class C (minimum)	Test Method as per DIN EN 12068
Inner to Inner Outer to Inner	@ 23 C	N/mm	1.5	Annexure B
	@T_{max}	N/mm	0.3	
Outer to Outer	23°C	N/mm	1.5	
	@$T_{max.}$	N/mm	0.3	
To Pipe Surface	@ 23°C	N/min	5.0	Annexure C
	@ T $_{Max.}$	N/mm	1.0	
To Factory Coating	@ 23°C	N/mm	5.0	
	@$T_{Max.}$	N/mm	1.0	
Notes				
T max shall be (+) 60 °C.				

3.4 TEST CERTIFICATES

The Contractor shall ensure that the Manufacturer has carried out all quality control tests on each batch of material and test certificates are provided as per the requirements of this specification. These documents shall be furnished to the Company prior to commencement of field joint coating application. Company reserves the right to have the materials tested by an independent laboratory.

3.5 MATERIAL IDENTIFICATION

All materials shall be identified by the batch number. It shall be the responsibility of the Contractor to ensure that the materials supplied are properly packed and marked with the Manufacturer's Name, material designation, batch number, date of manufacture and shelf life.

Random product batch sampling tests shall be performed at site by the Contractor and the results recorded for review by the Company. Tests shall include, but not be limited to, measurement of backing thickness, dimensional compliance and control batch records compliance.

3.6 MATERIAL STORAGE

All materials shall be stored as per the Manufacturer's recommendation. Sleeves shall upon receipt be examined to check their integrity and their compliance to the specification. The sleeves shall be stored, covered, sheltered from sunlight, and away from excessive heat. Sleeves, which for any reason have undergone visible distortion or contamination, shall be segregated and removed immediately from the installation site. Liquid materials shall be stored and handled such that their original properties are retained.

The material shall not be older than their period of validity at the time of application by the Contractor.

3.7 FACILITIES AND TOOLS FOR FIELD JOINT APPLICATION

Copyright VCS Quality Services Private Limited – All rights reserved

Digitally signed by RACHNA SHUKLA
Date: 2025.03.13 12:53:14 IST

The Contractor shall provide and maintain mobile facilities which contain all necessary equipment, tools, tackles, etc. for carrying out the surface preparation and application of field joint coating.

The Contractor shall furnish sufficient number of following equipment and the required spares as a minimum for inspection and testing purposes for each crew:

- Full circle adjustable 25 kV holiday detector with a visible and audible signal system
- Non-destructive type thickness gauge for measuring thickness of as-applied coating
- Contact type temperature recording thermometer
- Roughness profile measuring instrument

4.0 HEAT SHRINK WRAPROUND SLEEVE SYSTEM PRE-QUALIFICATION

The field joint coating system and its application procedure proposed by the Contractor shall be prequalified during the sleeve installation start-up phase. Five joints shall be coated in compliance with the requirements of this specification and then inspected and tested in respect of the following:

- Surface preparation, including cleanliness, roughness profile and dust contamination
- Pre-heat temperature
- Primer thickness
- Visual appearance and void after sleeve installation on the body, area-adjoining weld seam and adjoining factory applied coating. A strip of 50 mm wide X 200 mm long shall be removed for this purpose.
- Holiday testing
- As-applied coating thickness
- Peel strength test at 23°C and 60°C (between sleeve and pipe surface, between sleeve and factory applied coating & between overlap)

Company Representative shall witness the tests and inspection of coating. Regular application of field joint coating commences only after successful completion of the pre-qualification testing.

After successful completion of the pre-qualification testing, the entire field joint coating shall be removed, the pipe surface re-blasted and field joint coating re-applied as per this specification.

5.0 HEAT SHRINK WRAPROUND SLEEVE APPLICATION

5.1 GENERAL

The application procedure shall be in accordance with Manufacturer's instruction and the minimum requirements specified below whichever are most stringent and shall be demonstrated to and approved by Company. Manufacturer's expert shall supervise the application and shall be available at site upon request during qualification of application procedure and during construction at Contractor's Cost.

5.2 OPERATOR QUALIFICATION

Operators for coating application shall be given necessary instructions and training before start of work, by the Contractor. To verify and qualify the application procedures, all coating applied during the qualification test shall be removed for destructive testing as detailed subsequently in this specification. Contractor shall only utilize those operators who have been approved/ prequalified by the field joint coating manufacturer.

Copyright VCS Quality Services Private Limited – All rights reserved

Digitally signed by RACHNA SHUKLA
Date: 2025.03.13 12:53:14 IST

5.3 SURFACE PREPARATION

Oil, grease, salt and other contaminants shall be removed from steel surface by wiping with rags soaked with suitable solvents. Solvent cleaning shall be done in accordance with SSPC-SP1.

5.3.1 BLAST CLEANING

Each field joint shall be blast cleaned using a closed cycle blasting unit or open expendable blasting equipment. With the first equipment type, steel or chilled shot and iron grit shall be used and Garnet material with the second one (in case the authority having jurisdiction have no objection, the contractor may adopt sand blasting instead of garnet material). During blast cleaning the pipe surface temperature shall be simultaneously more than 5°C and more than 3°C above ambient dew point, while the ambient relative humidity shall not be greater than 85%. Prior to surface cleaning the surface shall be completely dry. The surface shall be cleaned to a grade Sa2 ½ in accordance with Swedish Standard SIS 055900 with a roughness profile of 50-70 microns. Surface roughness profile shall be measured using an approved profile comparator in accordance with ISO 8503-1 and shall be calibrated prior to start of work in accordance with ISO 8503-3 or ISO 8503-4. The blast cleanliness shall be checked on every joint and the roughness profile shall be checked 1 in every 10 joints.

Dust, grit or foreign matter shall be removed from the cleaned surface by an industrial vacuum cleaner. The contamination allowed shall be of a rating max 2 as per ISO 8502-3. The frequency of checking for dust contamination shall be 1 every 10 joints.

Blast cleaned field joint shall be coated within 2-4 hours according to the conditions below:

- Relative Humidity (RH) >80% - 2 Hours
- Relative Humidity (RH) 70-80 - 3 Hours
- Relative Humidity (RH) <70% - 4 Hours

Pipes delayed beyond this point or pipes showing any visible rust stain, shall be blast cleaned again.

5.3.2 SURFACE INSPECTION

The field joint surface shall be inspected immediately after blast cleaning and any feature of the steel surface such as weld spatter, scabs, laminations or other imperfections considered injurious to the coating integrity, made visible during blast cleaning shall be reported to the Company Representative and on permission from Company Representative, such defects shall be removed by filing or grinding. Pipes affected in this manner shall be then re-blast cleaned if the defective area is larger than 50 mm in diameter.

All steel joint surfaces shall be thoroughly examined before the application of the coating in order to ensure the surfaces are free of oil, grease, rust, mud, earth or any other foreign matter. All these substances shall be removed before coating.

5.3.3 PREPARATION OF EDGE OF FACTORY APPLIED COATING

The ends of existing factory applied mainline coating shall be inspected and chamfered. Disbanded portions of the coating shall be removed and then suitably trimmed. Portions where parent coating is removed shall be thoroughly cleaned. The adjacent chamfered areas of the line pipe coating shall also be cleaned and abraded, to expose a clean uniform fresh surface of uncontaminated factory applied coating.

Copyright VCS Quality Services Private Limited – All rights reserved

Digitally signed by RACHNA SHUKLA
Date: 2025.03.13 12:53:14 IST

Field joint coating shall be applied on the joints immediately after the completion of cleaning operation.

5.4 PREHEATING

Before placing the wraparound sleeve, the bare steel surface shall be preheated either with a torch moved back and forth over the surface or by induction heating. The minimum pre-heat temperature shall be as recommended by manufacturer and shall be checked by means of contact type temperature-recording thermometer at minimum four (4) locations uniformly spaced around the pipe circumference.

Temperature indicating crayons shall not be used.

Pre-heat temperature shall be checked on every joint. Care shall be taken to ensure that the entire circumference of the pipe is heated evenly. Temperature measuring instruments shall be calibrated immediately before the start of the works and thereafter at intervals recommended by the Manufacturer of the instrument.

5.5 APPLICATION OF PRIMER

Upon pre-heating, the pipe surface shall be applied with two pack epoxy primer of wet film thickness of 200 microns or as per manufacturer's recommendation whichever is higher, to cover the exposed bare metal of the welded field joint and 10 mm minimum on to the adjacent pipe coating if recommended by the manufacturer. The wet film thickness of the primer shall be checked on every joint with a wet film thickness gauge prior to installation of sleeve. Thickness gauge shall be calibrated once in a shift.

5.6 APPLICATION OF HEAT SHRINK SLEEVE

Immediately after application of epoxy primer, the wraparound sleeve shall be entirely wrapped around the pipe within the stipulated time recommended by the Manufacturer. Sleeve shall be positioned such that the closure patch is located on one side of the pipe at 10 or 2 O'clock position, with the edge of the undergoing layer facing upward and an overlap of minimum 50 mm. Gently heat by appropriate torch the backing and the adhesive of the closure and press it firmly into place.

A heat shrinking procedure using heating torch or induction heaters shall be applied to shrink the sleeve in such a manner to start shrinkage of the sleeve beginning from the center of the sleeve and heat circumferentially around the pipe. Continue heating from the center towards one end of the sleeve until recovery is completed. In a similar manner, heat and shrink the remaining side. Shrinking has been completed when the adhesive begins to ooze at the sleeve edges all around the circumference and change in the visual indicator other means provided on the backing material, to signify proper shrinkage, shall be complete and uniform.

The complete shrinking of the entire sleeves shall be obtained without undue heating of existing pipe coating and providing due bonding between pipe, sleeve and pipe coating. The installed sleeve shall not be disturbed until the adhesive has solidified.

6.0 INSPECTION AND TESTING

6.1 VISUAL INSPECTION

Visual inspection of the as applied coating shall be carried out on every joint, for the following:

- Mastic extrusion on either ends of the sleeve shall be examined

Copyright VCS Quality Services Private Limited – All rights reserved

Digitally signed by RACHNA SHUKLA
Date: 2025.03.13 12:53:14 IST

- There shall be no sign of punctures or pinholes or bend failure. The' external appearance of the sleeve shall be smooth, free of dimples, air entrapment or void formation. All sleeves shall be tested for the presence of voids by knocking on the sleeves. A hollow sound compared to the remainder of the sleeve may indicate the presence of voids under; the sleeve. Such sleeve shall be tested for-adhesion at the discretion of the Company Representative.
- Weld bead profile shall be visible through-the sleeve
- Visual indicator provided on the backing and the closure patch showing desired heat is achieved.

6.2 COATING THICKNESS

Coating thickness shall be checked by non-destructive methods for each field joint. Average thickness of the as-applied coating on pipe body shall be established based on measurements at min. eight locations i.e. four measurements on either side of the girth weld at 3, 6, 9 & 12 O' clock positions. To establish the minimum thickness on the girth weld, four measurements shall be taken on apex on the weld at 3, 6, 9 & 12 O' clock positions. All such measurements shall be recorded. Company representative reserves the right to ask for additional measurements at any location on the field joint coating, whenever doubt arises.

6.3 Holiday Detection

The entire surface of each joint shall be inspected by means of a full circle holiday detector approved by Company, set to a DC voltage applicable as per the requirements of factory applied mainline coating specification of Company. Inspection of the sleeves shall be conducted only after the joint has cooled below 50°C. The holiday detector used shall be checked and calibrated daily with an accurate DC voltmeter. The detector electrode shall be in direct contact with the surface of coating to be inspected.

No field joint shall be covered or lowered in the trench until it has been approved by the Company.

6.4 Peel Strength Testing

6.4.1 One out of every 50 joint coatings or one joint coating out of every day's production, whichever is stringent, shall he tested to establish the peel strength on steel and factory applied coating. Contractor shall carry out such testing in the presence of Company Representative.

6.4.2 From each test sleeve selected as above, one or more strips of size 25mm x 200 mm shall be cut perpendicular to the pipe axis and slowly peeled off.

The required peel strength shall meet the requirements of this specification as applicable for (+) 23 °C or (+) 60 °C whichever is feasible. This test shall be conducted between wrapping & metal and mill coating & between layers at Overlap with joint coating (wherever applicable). After removal of strip, the bulk of adhesive shall remain adhered to the pipe showing no bare metal, otherwise, test shall be considered failed. The adhesive layer that remains on the pipe surface shall generally be free of voids resulting from air or gas inclusion. In case the peel strength test at a different temperature than that specified is warranted due to the ambient site conditions, then the peel strength shall comply the recommendation of the manufacturer. Manufacturer shall be asked to furnish peel strength values corresponding to various expected temperatures, prior to start of the works.

6.4.3 If the sleeve does not meet the requirements of clause 6.4.2 the adjacent two sleeves shall also be tested. If the adjacent two sleeves are acceptable the test rate shall be increased to

Copyright VCS Quality Services Private Limited – All rights reserved

Digitally signed by RACHNA SHUKLA
Date: 2025.03.13 12:53:14 IST

one sleeve every twenty five until Company's Representative is satisfied. The test rate can then be reduced as per clause 6.4.1 at discretion of Company's Representative. If either or both of the adjacent two sleeves do not meet the requirements of clause 6.4.2, the field coating shall be stopped.

6.4.4 Company Representative reserve the right of 100% removal of sleeves if he is not convinced that the requirements of clause 6.4.2 are achieved.

7.0 REPAIRS

7.1 If a field is detected to be unacceptable after testing as per section 6.0 of this specification the Contractor shall, at his own cost:

- Determine the cause of the faulty results of the field coating.
- Mobilize the expert of manufacturer, if required.
- Test to the complete satisfaction of Company, already completed field coatings.
- Stop the field coating works until remedial measures are taken against the causes of such faults, to the entire satisfaction of the Company.

7.2 Contractor shall replace all joint coating found or expected to be unacceptable as per section 6.0 of this specification.

7.3 Contractor shall, at his own cost repair all areas where the coating has been removed for testing by the Company.

7.4 After the coating work on welded joints and repan to the coating have been completed the coating as a whole shall be tested with a spark-tester before lowering or jacking the pipeline.

7.5 Company shall be entitled to check the coating on buried pipelines or parts of pipelines with equipment such as the "Pearson Meter" and the resistance meter or during CP survey. If coating defects are established, the Contractor shall be responsible for excavation at such points, repairing the coating, spark testing and backfilling the excavations without extra cost to Company.

8.0 DOCUMENTATION

8.1 PRIOR TO PROCUREMENT

The Contractor shall furnish the following details for qualification of the heat shrink wraparound sleeve Manufacturer and the material, prior to commencement of procurement, for Company approval:

- Comprehensive information as per Section 5.2, DIN EN 12068 along with descriptive technical catalogues
- Test certificates and results of previously conducted tests, for all properties specified in this specification
- Reference list of previous supplies of similar material in the last five years, indicating the project name, pipeline diameter, operating temperature, year of supply, contact person and performance feedback

8.2 PRIOR TO SHIPMENT

- The Contractor shall furnish the following documents, prior to shipment of the materials:
- Test certificates and results as per Manufacturer's quality control procedure for each batch

Copyright VCS Quality Services Private Limited – All rights reserved

Digitally signed by RACHNA SHUKLA
Date: 2025.03.13 12:53:14 IST

of materials

- Specific application instructions
- Storage and handling instructions
- Recommended peel strength values corresponding to expected site conditions/ ambient temperatures.

8.3 PRIOR TO FIELD APPLICATION After successful qualification of field joint coating system and its application procedure, the Contractor shall submit a qualification report before commencement of production of field joint coating.

Copyright VCS Quality Services Private Limited – All rights reserved

Digitally signed by RACHNA SHUKLA
Date: 2025.03.13 12:53:14 IST

VCS QUALITY SERVICES PVT. LTD.

STANDARD SPECIFICATION
FOR
HORIZONTAL DIRECTIONAL DRILLED CROSSINGS

VCS – SS – PP - 2013

04	29.04.2022	RP	MC	Hk	GW
03	04.01.2022	SR	MC	HK	HK
Rev. No	Date	Prepared By	Checked By	Approved By	Authorized By

UNCONTROLLED COPY	:	If printed
CONTROLLED COPY	:	If in soft and signed

Copyright VCS Quality Services Private Limited – All rights reserved

Digitally signed by RACHNA SHUKLA
Date: 2025.03.13 12:53:14 IST

REVISION RECORD						
Rev.	**Revision Date**	**Prepared by**	**Checked by**	**Approved by**	**Authorized by**	**Revision Description**
00	23.06.2017					Issued as Standard Specification
		AS	SM	AD	SK	
01	21.02.2018					Document formatting, Cover Page, Doc numbering updated from SS-PL-011 to VPC-SS-PL-0011)
		SHH	MC	AD	SK	
02	28.01.2020					Document numbering updated from VPC-SS-PL-0011 to VPC-SS-PP-2013
		MB	SM	AD	SK	
03	04.01.2022					Revised as Marked
		SR	MC	HK	HK	
04	29.04.2022					
		RP	MC	HK	GW	VCS QMS Integration

Copyright VCS Quality Services Private Limited – All rights reserved

Digitally signed by RACHNA SHUKLA
Date: 2025.03.13 12:53:14 IST

ABBREVIATIONS

ASME	American Society of Mechanical Engineers
API	American Petroleum Institute
OISD	Oil Industry Safety Directorate (of India)
SMYS	Specified Minimum Yield Strength
PNGRB	Petroleum and Natural Gas Regulatory Board
SMYS	Specified Minimum Yield Strength

Copyright VCS Quality Services Private Limited – All rights reserved

Digitally signed by RACHNA SHUKLA
Date: 2025.03.13 12:53:14 IST

CONTENTS

1.0 SCOPE 5

2.0 REFERENCE DOCUMENTS 5

3.0 DESIGN AND ENGINEERING 6

4.0 CONSRUCTION 9

5.0 DOCUMENTATION 20

Copyright VCS Quality Services Private Limited – All rights reserved

Digitally signed by RACHNA SHUKLA
Date: 2025.03.13 12:53:14 IST

1.0 SCOPE

1.1. This specification covers minimum technical requirements related to various activities to be performed by an agency/ contractor entrusted with the responsibility to install pipeline at crossings (i.e., Major Rivers, Canals, Highways etc.) using Horizontal Directional Drilling (HDD) technique.

1.2. This specification shall be read in conjunction with the requirements of scope of work, all specifications, documents, drawings and other requirements included in the Contract between Company and Contractor.

1.3. Contractor shall, execute the work in compliance with laws, by-laws, ordinances and regulations. Contractor shall provide all services, labor, inclusive of supervision thereof, supply of all materials, (excluding "Company supplied Materials") equipment and appliances.

1.4. Contractor shall take full responsibility for the suitability and safety of all operations and methods involved in the work.

1.5. Contractor shall be deemed to have inspected and examined the work area and its surroundings and to have satisfied himself as far as practicable with sub-surface conditions, hydrological and climatic conditions, the extent and nature of the work and materials necessary for the completion of the work, and the means of access to the work area.

1.6. Contractor shall be deemed to have obtained all necessary information with regard to risks, contingencies and all other circumstances, which may influence the work.

1.7. Contractor shall, in connection with the work, provide and maintain at his own costs all lights, guards, fencing, as necessary or directed by Company.

1.8. For the purpose of this specification, the following definitions shall hold:

- The words 'Shall' and 'Must' are mandatory.

- The words 'Should', 'May' and Will' are non- mandatory, advisory, or recommended.

2.0 REFERENCE DOCUMENTS

2.1 Reference has also been made in this specification to the latest edition (edition in force at the time of issue of enquiry) of the following Codes, Standards, regulations and Specifications.

Copyright VCS Quality Services Private Limited – All rights reserved

Digitally signed by RACHNA SHUKLA
Date: 2025.03.13 12:53:14 IST

AMERICAN SOCIETY OF MECHANICAL ENGINEERS (ASME)

B 31.4 : Pipeline Transportation System for Liquid Hydrocarbons and other Liquids

B 31.8 : Gas Transmission and Distribution Piping Systems

AMERICAN PETROLEUM INSTITUTE (API)

RP 1102 : Steel Pipeline Crossing Railroads and Highways

PNGRB REGULATIONS:

G.S.R 808(E) T4S : Regulations for Natural Gas Pipelines

G.S.R. Infra/ T4S/ P&PPL : Regulations for Petroleum and Petroleum products pipelines

G.S.R. 612(E) T4S : Regulations for CGD Network

COMPANY STANDARDS

VPC-SS-PP-2001 : Specification for Pipeline Construction (Onshore)

VPC-SS-PP-2003 : Specification for 3 Layer Polyethylene Coating

VPC-SS-PP-2014: Specification for Hydro Testing of Onshore Pipelines

2.2 In case of conflict between the requirements of this specification and the above referred documents, the requirements of this specification shall govern.

3.0 DESIGN AND ENGINEERING

3.1 The minimum requirements of limits of each river/ major water crossing shall be as defined in the CONTRACT drawings furnished by Company. Contractor may change the limits slightly to suit his equipment and installation technique, with prior written approval from Company.

3.2 Within the entire limits of crossing, as defined in the CONTRACT drawings, the cover to top of corrosion coated pipe shall be at least 2.5 meters below the "specified" minimum scour level profile for the river/ major water bodies with normal soil, and at least 1.5 meters below the "specified" minimum scour level profile for the river/ major water bodies with rock sub-strata.

Copyright VCS Quality Services Private Limited – All rights reserved

Digitally signed by RACHNA SHUKLA
Date: 2025.03.13 12:53:14 IST

3.3 The entry and exit points of the pipeline at ground level shall not come within the limits of crossing as defined for individual river/ major water crossings.

3.4 Wherever the drilled length for a river/ major water crossing includes the crossings of other obstacles such as roads, railroads, canals, streams, etc. Following minimum requirements of cover to the pipe shall be satisfied:

For Road Crossing	:	1.2 m from top of road to top of pipe coating
For Railroad Crossing	:	7 m from base of rail to top of pipe coating
For Canal/Stream Crossing	:	1.5 m from lowest bed level to top of pipe coating
For Drainage Ditches at Road/Railroad	:	1.2 m from bottom of ditch to top of pipe coating

3.5 Contractor shall carry out calculations for determining the maximum permissible overburden on pipe, to check that the empty pipeline is safe from collapse at any point along the drilled crossing section. Drilled hole shall be checked against collapse/caving under overburden and pipe shall be checked against buckling/collapse under axial tension and bending stresses. Contractor shall submit these calculations to Company for approval.

3.6 Pipeline Axis

As shown in the reference drawing at each crossing, the plane containing the pipe axis shall be perpendicular to the horizontal plane. There shall be no bending of longitudinal pipe axis at depths shallower than two meters below ground level.

3.7 **Back-reamed Hole and Pipeline Interface** For each crossing, Contractor shall devise a suitable combination of the following in order to optimize the crossing design in terms of pipeline stresses and pull force requirements.

- Back-reamed hole diameter
- Bentonite density
- Pipeline submerged weight in bentonite (and means to achieve that weight)

Contractor shall indicate the maximum shear stress in the pipeline coating that will result due to the above parameters and other design characteristics described in this section. Contractor shall furnish all calculations for Company's approval. If shear stress on pipe

Copyright VCS Quality Services Private Limited – All rights reserved

Digitally signed by RACHNA SHUKLA
Date: 2025.03.13 12:53:14 IST

coatings is, in the opinion of Company, beyond the permissible limits, Contractor shall revise the above parameters to reduce shear stress on pipe coating to permissible limits.

3.8 Contractor shall determine the minimum allowable elastic bend radius for the pipe from the following considerations:

3.8.1 Pipeline Longitudinal Stress during Installation

Total maximum longitudinal stress in the pipeline due to tension and bending at any location shall not exceed 90 % of the SMYS of the pipe material. Contractor shall, in order to check this requirement, evaluate the maximum tension forces to which the pipeline is subjected at any phase of its installation during the pulling operation.

3.8.2 Pipeline Equivalent Stress during Final Hydrotest

After installation, the pipeline shall be hydrostatically tested to a minimum test pressure equal to 1.5 times the design pressure for gas pipeline and 1.25 times the design pressure for liquid pipeline. The combined equivalent stress in the pipeline due to bending and test pressure shall not exceed 90 % of the SMYS of pipe material.

3.8.3 Pipeline Maximum Equivalent Stress during Service

Permissible values of pipeline maximum equivalent stress during service shall be governed by the requirements of ASME B31.8/ B31.4, as applicable.

3.8.4 The minimum allowable radius of curvature for the pipeline shall be the highest value of the minimum pipeline elastic bend radius as computed from the considerations outlined as above (Para 3.8.1 thru 3.8.3) after correction for drilling inaccuracies or multiplication by the factor 1.85 whichever result in the highest permissible value of minimum elastic bend radius.

3.8.5 Contractor shall submit all calculations for Company's approval.

3.9 Pipeline Configuration along the Supported String before Entry Point

For each crossing, Contractor shall determine the required pipeline configuration in order

to allow smooth pull in the crossing entry point and admissible stress in the supported pipeline string. Pipeline combined stress shall not exceed 90 % of the SMYS for line pipe material.

Contractor shall furnish all calculations and specify the number of required supports, description of the supports, their coordinates and capacity in metric tons. Contractor shall also furnish a drawing of the launching ramp indicating the pipeline configuration. The

Copyright VCS Quality Services Private Limited – All rights reserved

Digitally signed by RACHNA SHUKLA
Date: 2025.03.13 12:53:14 IST

distance between each roller shall also be specified. Calculations for roller in this respect shall be submitted.

3.10 Contractor shall, based on results of design and engineering carried out by him, prepare construction drawings for each river/ major water crossing and shall submit the same for Company's approval. Construction drawings shall indicate the pipeline profile with levels furnished at sufficient intervals for proper control during construction. Other relevant details viz. entry and exit angles, radii of bends, etc. shall also be indicated. Contractor shall also calculate the total length of pipeline required as well as the maximum tension required on the pull head of the rig. All construction works shall be carried out in accordance with the construction drawings approved by Company

3.11 Before commencement of any field work, Contractor shall furnish for Company approval all design calculations as stipulated in Para 3.5, 3.7 thru 3.10 above and all construction drawings. Company shall inform Contractor within 21 calendar days of receipt of such calculations/drawings/data, of its comments/clarifications, if any on the same. Contractor shall incorporate the comments, if any and resubmit the documents for Company approval.

4.0 CONSRUCTION

Contractor shall comply with all the conditions and requirements issued by Authorities having jurisdiction in the area where the work is to be performed. If no public road exists to the crossing location, Contractor shall arrange on his own for access to his work area at no extra cost to Company.

4.1 Installation Procedure

Contractor shall, before commencing any work at site, submit for Company's approval a detailed installation procedure for each river/ major water crossing.

a) Project Organization Chart indicating Contractor's organizational set-up at site and manpower deployment

b) Preparation of fabrication yard and launching areas

c) Details of all equipment to be deployed for preparation of pipe string and installation of crossing. Technical characteristics and capacity of each equipment including instrumentation, monitoring and control equipment shall be furnished in details.

d) Pipeline string preparation details (hauling, stringing, welding, etc.)

e) Method of installation covering all steps of construction, viz. rig

Copyright VCS Quality Services Private Limited – All rights reserved

Digitally signed by RACHNA SHUKLA
Date: 2025.03.13 12:53:14 IST

up, Calculations for maximum pulling force on the rig and recommended maximum pulling speed and rig anchoring.

f) Hole collapse and pipe buckling calculations

g) Pre/post-installation hydrostatic test procedure.

h) Cold field bending and tie-in details.

i) Time schedule for construction

Company shall inform Contractor within 21 calendar days of receipt of above installation procedure, of its comments/clarifications, if any, on the same. Contractor shall incorporate the comments, if any and resubmit the documents for Company approval.

The time schedule shall be in accordance with overall time schedule for the project.

Approval by Company of the methods used by Contractor shall in no way relieve the Contractor from the sole responsibility for safe and satisfactory installation of the crossing.

4.2 ROU Preparation

The Contractor is required to perform his construction activities within the width of ROU set aside for construction of pipeline, unless he has made other arrangements with the land owner and/or tenant for using extra land.

Contractor shall clear and grade the length of ROU required for installation of on land portion and drilled river-crossing portion in his scope. Contractor shall do such grading on ROU to provide access to the pipeline construction and to ensure safe construction of pipeline.

Contractor shall ensure that his construction activities shall neither cause inconvenience to public nor shall there be any undue interference with the normal use of the land and watercourses. Minimum necessary trees on ROU to be cut/ felled shall be identified, permissions obtained, recorded and record shall be handed over to Company. The ROU clearing and grading operations shall in no case involve damages/changes of embankment/structures of any type and class without prior approval of the authorities having jurisdiction over the same.

4.3 Taking-over, Handling, Hauling, Storing and Stringing of pipes and other materials

4.3.1 Contractor shall receive and take-over against requisition bare/corrosion coated

Copyright VCS Quality Services Private Limited – All rights reserved

Digitally signed by RACHNA SHUKLA
Date: 2025.03.13 12:53:14 IST

line pipes from Company's designated place(s) of issue, as defined elsewhere in the CONTRACT. Contractor shall be fully responsible for the pipe and pipe identification marking from the time of taking delivery from the Company, until such time that the pipes are installed in permanent installation.

4.3.2 Contractor shall perform visual inspection of the bare pipes and coating of the corrosion coated pipes in the presence of Company Representative and all damages shall be recorded. In the case of corrosion coated pipes, Contractor at his option may carry out holiday detection at a prescribed set voltage and record such holidays, in the presence of Company Representative at the time of "taking over". However, if Contractor proposes to perform only visual inspection of coating, then the repair of all the holidays found at the time of installation shall be carried out by the Contractor at no extra cost to Company.

4.3.3 Contractor shall perform visual inspection of the bare pipes and coating of the corrosion coated pipes in the presence of Company Representative and all damages shall be recorded. In the case of corrosion coated pipes, Contractor at his option may carry out holiday detection at a prescribed set voltage and record such holidays, in the presence of Company Representative at the time of "taking over". However, if Contractor proposes to perform only visual inspection of coating, then the repair of all the holidays found at the time of installation shall be carried out by the Contractor at no extra cost to Company.

The Contractor shall be entitled for extra compensation for repair and rectification of defects recorded at the time of taking delivery as per the rates set forth in the 'Schedule of Rates'. Repair of all damages beyond such record shall be the Contractor's responsibility at his cost. Contractor shall be fully responsible for arranging and paying for all/ any storage areas.

4.3.4 Materials which are susceptible of deteriorating or suffering from damages especially due to humidity, exposure to high thermal excursions or adverse weather conditions, shall be suitably stored and protected. Deteriorated materials shall not be used and shall be replaced with no extra cost to Company.

4.4 Pipe String

Complete pipe string shall be prepared as a single string for pulling.

4.5 Repair of Pipe Corrosion Coating

Repair of pipe corrosion coating shall be carried out by Contractor as per relevant specification included in the CONTRACT

Copyright VCS Quality Services Private Limited – All rights reserved

Digitally signed by RACHNA SHUKLA
Date: 2025.03.13 12:53:14 IST

4.6 Lining-Up

Each length of pipe shall be thoroughly examined internally and externally to make sure that it is free from visual defects, damage, severe corrosion, dirt, animals, or any other foreign objects. Each length of the pipe shall be adequately swabbed, either by use of canvas belt disc of proper diameter, compressed air blowing or by other methods approved by the Company. Damaged/corroded pipes shall be kept separate. Each length of pipe shall be examined/ cleaned by pulling through just before being welded.

4.7 Pipe Defects and Repairs

It is Contractor's responsibility to repair all internal and/or external defects. Immediately prior to aligning pipe for welding, the beveled ends of each joint of pipe and the area immediately adjacent thereto (at least 25mm from the edge on the inside and outside of the pipe) shall be thoroughly cleaned of paint, rust, mill scale, dirt or other foreign matter by use of power driven wire buffing wheels, disc sanders, or by other methods approved by Company. This shall be done at no extra cost.

All damaged ends of pipes that are bent, cut or otherwise mutilated such that, in the opinion of the Company, faulty alignment or unacceptable welding would result, shall be repaired or cut-off and relevelled to the correct angle with a beveling machine of a type approved by Company.

Dents in bevels with a depth of less than 1 mm shall be removed by Contractor during cleaning and grinding, ahead of the welding in the field at no extra cost. Contractor shall rebevel dented bevel ends with a depth of dent between 1 mm and 3mm. Dents over 3mm depth shall be repaired by cutting and rebevelling.

4.8 WELDING

Welding of the Pipeline shall be in accordance with Welding Specification and Welding Specification Charts included in the Contract.

4.9 CORROSION COATING OF FIELD WELD JOINTS

The complete field joint shall be blast cleaned to near white metal finish to Swedish standard SIS 055900 Grade SA 2½. The coating edges shall be suitably roughed and chamfered to provide smooth transition. The joint coating material shall be Raychem's "DIRAX" or another Company approved equivalent. The

Copyright VCS Quality Services Private Limited – All rights reserved

Digitally signed by RACHNA SHUKLA
Date: 2025.03.13 12:53:14 IST

method of application shall be strictly as per manufacturer's recommendations and will be subject to Company approval prior to use. Coating of field weld joints shall be carried out after pre-installation hydrostatic testing.

4.10 Installation

4.10.1 Installation shall be carried out in accordance with approved installation procedures. The entire drilled crossing shall be accomplished in a single operation.

4.10.2 Contractor shall ensure that the type of cutting tools and drilling fluids mobilized at site is suitable for the sub-soil strata at the drilling location.

4.10.3 Starting of any drilling activity is subject to approval from Engineer-in-Charge based upon the inspection of the rig capacity, number of drilling pipes and other accessories mobilized at site to ensure that the capacity of equipment is in accordance to the approved design document and/ or profile drawings to execute the work successfully.

4.10.4 Tracking and locating equipment shall be calibrated by the Contractor in presence of Engineer-in-Charge before the start work. Contractor shall continuously monitor the drilling path, entry & exit angle including depth of profile to ensure that pilot hole drilling is being carried out as per approved profile drawing. The as-drilled pilot hole profile drawing shall be verified by Engineer-in-Charge.

4.10.5 The lateral offset of the actual exit point of the pilot hole from the calculated and theoretical exit point shall not exceed two percent of the length of the crossing; however, the actual exit point shall not come outside the ROU limits of the pipeline. The length tolerance shall not exceed one per cent of the crossing length, subject to the condition that the actual exit point shall not be within the limits of crossing as defined in the Contract drawings/ documents.

4.10.6 Back reaming shall be done separately from the pipeline pulling operation. The size of the back-reamed hole shall be adequate (approximately 1.5 times the pipeline diameter) to allow enough clearance for smooth pullback of the pipeline.

4.10.7 Contractor shall be responsible for maintaining the drilled hole till such time the pipeline is pulled in.

4.10.8 During pulling operation, the buoyancy of the pipeline shall be controlled by suitable approved methods so as to maintain the buoyancy as close as possible to zero during pull-back in order to reduce friction forces of the pipeline in the hole.

Copyright VCS Quality Services Private Limited – All rights reserved

Digitally signed by RACHNA SHUKLA
Date: 2025.03.13 12:53:14 IST

Bentonite slurry of specified viscosity shall be pumped into the hole, preventing the wall from collapsing and protecting the pipeline coating.

4.10.9 Contractor shall provide free of charge reasonable facilities to Company's personnel to witness all stages of construction.

4.10.10 Contractor shall be responsible for the integrity of the corrosion coating.

4.10.11 Contractor shall be responsible for the integrity of the common coating and shall apply and necessary approved protective coatings:

Coating inspection of the pipeline after completion of pulling operation shall be made by:

a. Pulling the pipe to the extent possible with normal rig set up at the exit point.

b. Excavating the adjacent portion up to and including the first field joint at the exit point.

The pipeline and joint coating shall be examined visually and with holiday detectors for defect. The length to be inspected shall, as a minimum, be one pipe length and one joint coating. In case damages/ holidays are detected in the first pipe length/ joint, the subsequent pipe length/ joint shall be exposed and coating integrity checks shall be made. If found acceptable by Company, the first pipe length/ joint shall be repaired and/ or replaced as directed by Company If the coating of second pipe length/ joint is also found damaged, Contractor shall propose further course of action and Company's instructions shall be followed. All works shall be done at no extra cost to Company.

4.10.12 Before final hydrostatic testing, Contractor shall `prove' the diameter of the pipeline by passing a gauging pig through the pipeline. The gauging pig shall have a diameter equal to 95% of the nominal internal diameter of the pipe. Contractor shall supply and install all temporary headers and other equipment, piping and materials and consumable for the purpose.

4.11 Protection of Underground Utilities and Special Methods

Contractor shall obtain plans and full details of all existing and planned underground services from the relevant Local Authorities and be responsible for location and protection of the same.

Copyright VCS Quality Services Private Limited – All rights reserved

Digitally signed by RACHNA SHUKLA
Date: 2025.03.13 12:53:14 IST

Where the pipeline crosses other underground utilities/structures, Contractor shall first manually excavate to a depth and in such a manner that the utilities/structures are located. Should any damage to any structure/utility etc. occur, the Owner/Authority concerned shall be contacted by the Contractor and repair shall forthwith be carried out by the Contractor at his expense under the direction and to the satisfaction of Company and the concerned Owner/Authority.

Temporary underpinning or any other type of supports and other protective devices necessary to keep the interfering structure intact shall be provided by the Contractor at his own cost and shall be of such design as to ensure against their possible failure.

4.12 Bending

After pulling the pipeline across the drilled crossing, Contractor shall cut the extended portion of the pipeline at the entry and exit points. Thereafter, the drilled portion of the pipeline shall be cut at suitable location/ depth and extended on either bank by installing a cold field bend and a straight pipe length of 12 meters (one joint), such that the top of the pipeline is minimum 1.0 meter below the natural ground level.
The cold field bend shall be with minimum bend radius of 21 times the pipe diameter for pipe sizes 12” and below, 30 times the pipe outside diameter (OD) for pipe sizes 14” and 16" and 40 times the pipe diameter for pipe sizes 18" and above as applicable, unless specified otherwise.
Contractor shall use a bending machine and mandrel (if required) and employ approved and accepted methods of bending of coated pipe in accordance with good pipeline construction practice. The procedure shall include amongst other steps-lengths, maximum degree per pull and method and accuracy of measurement during pulling of the bend.

Cold field bends made from coated pipes shall be inspected visually and by holiday detector to locate damages, which shall be repaired by Contractor as per Company's approved Procedures.

The ends of each bent pipe length shall be straight and not involved anyway in the bending. In no event shall the end of the bend be closer than 1.5 meter from the end of a pipe or within one meter of a girth weld.

Copyright VCS Quality Services Private Limited – All rights reserved

Digitally signed by RACHNA SHUKLA
Date: 2025.03.13 12:53:14 IST

The ovality of the bent pipe shall not exceed 2.5% of the nominal diameter at any point. A check shall be performed on all bends in the presence of Company by passing a gauge consisting of two discs with a diameter equal to 95% of the nominal internal diameter of the pipe connected rigidly together at a distance equal to 300 mm. Miter bends are not permitted.

4.13 Hydrostatic testing

4.13.1 Pre-Installation Hydrostatic Testing

Contractor shall hydrostatically test the complete pipe string of each river crossing before installation as per approved procedure.

The section of the pipeline corresponding to the crossing shall, before installation, be subjected to a minimum hydrostatic test pressure equal to 1.5 times design pressure for gas pipeline and 1.25 times design pressure for liquid pipeline. The combined equivalent stress in the pipeline due to bending and test pressure shall not exceed 95% of the SMYS of the pipe material.

After the temperature has been stabilized, the pressure shall be maintained in the pipeline for at least six hours and recorded by manothermograph. During the test, Contractor shall check all welds for leakage. Failure, if any, during the test shall be rectified by the Contractor. If the same is due to failure on account of any cause other than defect in Company supplied material, the repairs shall be done free of cost, to the satisfaction of Company.

4.13.2 Final Hydrostatic Test

The complete water crossing shall be tested after installation. The pressure shall be the same as that specified for pre-installation hydrostatic test at Para 4.13.1 above. The combined equivalent stress in the pipeline due to bending, static head and test pressure shall not exceed 95% of the SMYS of the pipe material. After temperature stabilization, test pressure shall be maintained in the pipeline for a minimum twenty four (24) hours and recorded by manothermograph. The hydrostatic testing shall be carried out in accordance with approved procedures.

4.13.3 Test procedure

Contractor shall prepare for Company's approval a hydrostatic test procedure manual for pre-testing and post-installation testing of pipeline. The test procedure manual shall include, but shall not be limited to, the following items:

Copyright VCS Quality Services Private Limited – All rights reserved

Digitally signed by RACHNA SHUKLA
Date: 2025.03.13 12:53:14 IST

a. For the pipe section to be tested, a diagram indicating all fittings, vents, valves, temporary connections, relevant elevations and ratings. The diagram shall also indicate injection locations and intake and discharge lines.

b. Estimated amount of test water, water source, including required concentration of corrosion inhibitors and additives, procedure for inhibitor injection and control of concentration.

c. Filling and flushing procedures, including a complete description of all proposed equipment and instruments (including spares), their location and set-up.

d. The type and sequence of pigs and the pig tracking system for cleaning and removal of air pockets, pig inspection procedures, including procedure to be followed in case the gauging pig indicates damage.

e. Procedures for levelling and stabilization after filling and for pressurization and to allow for temperature stabilization.

f. Pressure testing procedure including a complete description of all proposed equipment and instruments (including spares), their location and set-up, and proposed system for observation and recording of data during the pressure test.

g. All calculations including air-volume calculations and pressure change due to temperature change calculations.

h. Procedure for detection and location of leaks.

i. Procedure for safe dewatering the pipeline section after testing, including a complete description of all proposed equipment and instruments (including spares), their location and set-up, the type and sequence of pigs and the pig tracking system along with the pig specifications.

j. Forms for recording the testing data.

4.13.2 Contractor shall furnish all necessary equipment & instrumentation for performing the work including all temporary piping, hydro test header and pigging headers etc.

4.13.3 The test medium shall be fresh water to be arranged by the Contractor. The water to be used shall be filtered, shall not be contaminated, and free from sand of silt. Contractor shall submit laboratory test reports of water used for testing. Contractor shall provide Company approved corrosion inhibitors, oxygen scavengers and bactericides to be added to

Copyright VCS Quality Services Private Limited – All rights reserved

Digitally signed by RACHNA SHUKLA
Date: 2025.03.13 12:53:14 IST

the test water. Contractor shall furnish and install all temporary piping, which may be necessary to connect from source of water to its pumps and manifolds/tankage.

4.13.4 Before filling operation, Contractor shall clean the pipeline by air driven pigs provided with spring loaded brushes and cups to remove all mill scale, rust/sand from the internal of pipe sections.

4.13.5 The hydrostatic test shall be considered as positive if pressure has kept a constant value throughout the test duration, except for changes due to temperature effects, and there is no abrupt pressure drop throughout the test duration.

If test section fails to maintain the specified test pressure after isolation, Contractor shall determine by searching the location of leakage or failure. All leaks and failures within the pipe wall or longitudinal seam shall be repaired by replacement of entire joint or joints in which leakage or failure occurs. In those cases where leaks occur in circumferential welds the method of repair shall be determined by Company. Contractor shall comply with instructions of the Company whether to replace a section of the line pipe that includes the line leak or whether to repair the circumferential weld. This repair should, however, meet the requirements of welding specification contained herein. Where failures occur in pipeline field bends, bends shall be replaced with same degree of bends. After completion of repairs, the hydrostatic test shall be repeated in full, as per the approved procedures.

4.13.6 All work of reinstating line pipe, to replace failures, shall be done in accordance with the specifications contained herein.

Contractor shall haul and stockpile all damaged and defective pipes to storage locations designated by the Company. All cracks and splits resulting from failures shall be coated with an application of grease to preserve the characteristics of failures from corrosion. Joints of failed pipes shall be marked with paint, with a tag indicating failure details, date and location of failure and pressure at which failure occurred.

4.13.7 After completion of successful hydrotest of the above portion, the pipeline shall be capped and buried. Pipeline end position on the banks shall be marked on the ground by installing location markers on both banks approved by Company.

4.14 Permanent Pipeline Markers

On both banks of each river/ major water crossing, Contractor shall install a Navigable Waterway Pipeline Crossing Warning Sign in accordance. Contractor shall supply all materials and fabricate and install the markers as per reference

Copyright VCS Quality Services Private Limited – All rights reserved

Digitally signed by RACHNA SHUKLA
Date: 2025.03.13 12:53:14 IST

drawing. Wherever feasible, the pipeline markers shall be installed on the embankments, however, exact location shall be decided based on site conditions and as directed by company.

4.15 Fencing

Wherever specified, Contractor shall supply all materials and install G.I. Wire Chain link security fencing of size 10m x 10m x 2.5m high with lockable steel gate around the pipe ends and test stations for temporary C.P. on both sides of each river/ major water crossing.

4.16 IDLE TIME PRESERVATION OF PIPELINE

When so stated in the Contract, Contractor shall supply all materials and consumable including water and inhibitor and shall install all piping connections, valves, instrumentation, etc., and perform all works for preservation of pipeline by pressurization with inhibited water. Contractor shall use approved inhibitors and shall determine the required dosages of inhibitors and pressure for idle time preservation of the pipeline for a period of maximum six months from the date of completion of construction. Corrosion inhibitors and dosages shall be subject to Company's approval prior to use.

4.17 FINAL CLEAN UP

After completion of construction, Contractor shall clear the sites of all balance material and debris. All balance pipe lengths supplied by Company shall be returned to Company's designated stock yard(s), as defined elsewhere in the Contract. Site shall be cleared to the complete satisfaction of Company and authorities having jurisdiction. All such works shall be done at no extra cost to Company. On completion of clean-up, the ROU shall be restored to such stable and usable conditions as may be reasonably consistent with conditions of the ROU prior to laying/ installation of the pipeline.

4.18 Disposal of surplus soil & bentonite slurry & corrosion inhibited test water

Contractor shall arrange for safe disposal of all surplus soil and bentonite slurry & corrosion inhibited test water so as to avoid any harm to the environment/ occupants at locations duly approved by authorities and pollution control boards having jurisdiction and/ or as instructed by Company without any extra cost.

Copyright VCS Quality Services Private Limited – All rights reserved

Digitally signed by RACHNA SHUKLA
Date: 2025.03.13 12:53:14 IST

5 DOCUMENTATION

In addition to the documents specified elsewhere in this specification, Contractor shall submit the following documents/ records to Company.

Complete record of pipes 'taken-over' from Company, number of pipe lengths used, and record of return of balance pipe lengths to Company's designated stock-yard(s).

During the course of execution of the crossing, Contractor shall generate/compile the following data and furnish the same whenever required to Company in hard copies and electronic files.

a. Detailed drilling log and downhole data, including, but not limited to, the following:

i) Torque and pulling/pushing force

ii) Data on drilling fluid.

- Density
- Type of mud and additive employed.
- Mixing, pumping and cleaning.

b. Wash and drill pipe data, viz.

i) Dimension and material properties.
ii) Data on API classification.
iii) Age of and type of inspection previously carried out on these pipes.

c. Permits obtained from authorities having jurisdiction for the various works.

d. Plan & profile of the drilled hole along with the water level variations.

e. Records of hydrostatic pre-testing and final testing.

f. Record of Non-Destructive Testing of welds.

g. Clearance certificates form the landowners and Authorities having jurisdiction regarding satisfactory clean-up and restoration of pipeline Rou and work areas

After completion of construction, Contractor shall prepare and furnish As-Built drawings for the crossings. As built drawings shall, as a minimum include the following information:

- True profile of the river bed and banks along the pipeline;

Copyright VCS Quality Services Private Limited – All rights reserved

Digitally signed by RACHNA SHUKLA
Date: 2025.03.13 12:53:14 IST

- True profile of the pipeline as installed and the depth of cover to top of pipe at regular intervals;
- Location of entry and exit points and angles of entry and exit, along with lateral offset of exit point from the original pipeline alignment;
- Location and angle of field bends; Location of pipeline markers.

All As-Built drawings shall be prepared using software AutoCAD or above. Manually drafted drawings are not acceptable to Company. In addition, to the hard copies, as built drawings shall also be submitted in electronic media i.e., CD/ DVD.

All documents shall be in English language.

Copyright VCS Quality Services Private Limited – All rights reserved

Digitally signed by RACHNA SHUKLA
Date: 2025.03.13 12:53:14 IST

VCS QUALITY SERVICES PVT. LTD.

STANDARD SPECIFICATION

FOR

HYDROSTATIC TESTING OF ONSHORE PIPELINES

VCS– SS – PP -2014

Rev. No	Date	Prepared By	Checked By	Approved By	Authorized By
03	29.04.2022	RP	MC	HK	GW
02	04.01.2022	SR	MC	HK	HK

UNCONTROLLED COPY	:	If printed
CONTROLLED COPY	:	If in soft and signed

Copyright VCS Quality Services Private Limited – All rights reserved

Digitally signed by RACHNA SHUKLA
Date: 2025.03.13 12:53:14 IST

REVISION RECORD						
Rev.	**Revision Date**	**Prepared by**	**Checked by**	**Approved by**	**Authorized by**	**Revision Description**
00	23.06.2017					Document formatting, Cover Page, Doc numbering updated from SS-PL-012 to VPC-SS-PL-0012 keeping revision number same.
		AS	SM	AD	SK	
01	28.01.2020					Document numbering updated from VPC-SS-PL-0012 to VPC-SS-PP-2014
		MB	MC	AD	SK	
02	04.01.2022					Revised as marked
		SR	MC	HK	HK	
03	29.04.2022					
		RP	MC	HK	GW	VCS QMS Integration

Copyright VCS Quality Services Private Limited – All rights reserved

Digitally signed by RACHNA SHUKLA
Date: 2025.03.13 12:53:14 IST

ABBREVIATIONS

ASME	:	American Society of Mechanical Engineers
API	:	American Petroleum Institute
OISD	:	Oil Industry Safety Directorate (of India)
SMYS	:	Specified Minimum Yield Strength

Copyright VCS Quality Services Private Limited – All rights reserved

Digitally signed by RACHNA SHUKLA
Date: 2025.03.13 12:53:14 IST

CONTENTS

1.0 SCOPE 5

2.0 REFERENCE DOCUMENTS 5

3.0 GENERAL REQUIREMENT 6

4.0 TEST PROCEDURE 6

5.0 SAFETY PRECAUTIONS DURING THE HYDROTEST 7

6.0 TEST PRESSURE AND DURATION 8

7.0 EQUIIPMENT AND INSTRUMENTATION 8

8.0 HYDROSTATIC TESTING 11

9.0 CALCULATIONS 17

10.0 ACCEPTANCE 18

11.0 TERMINATION 19

12.0 TEST REPORT 20

13.0 PRESERVATION OF PIPELINE 21

14.0 PRECAUTIONS DURING THE TEST 21

15.0 DOCUMENTATION 22

TABLE 1: DIFFERENCE BETWEEN THE WATER THERMAL EXPANSION FACTOR AND THE STEEL THERMAL EXPANSION 23

FIG. 1- WATER COMPRESSIBILITY FACTOR v/s PRESSURE AND TEMPERATURE 27

Copyright VCS Quality Services Private Limited – All rights reserved

Digitally signed by RACHNA SHUKLA
Date: 2025.03.13 12:53:14 IST

1.0 SCOPE

1.1 This specification covers the minimum requirements of supply and various activities to be performed by Contractor for hydrostatic testing of cross-country steel pipelines transporting hydrocarbons in liquid or gaseous phase under high pressure.

This specification does not cover the requirements of EGP/caliper pigging, drying/ pre-commissioning of the tested pipelines.

1.2 This specification shall be read in conjunction with scope of work, specifications, documents, drawings and other requirements indicated in and included in the Contract between the Company and the Contractor. Unless specified otherwise, all sections of this specification shall apply to all specifications referred in this specification

2.0 REFERENCE DOCUMENTS

2.1 The latest edition of following Codes and Standards are referenced in this specification and all provisions of these reference codes and standards shall be applicable.

AMERICAN SOCIETY OF MECHANICAL ENGINEERS (ASME)

ASME B 31.4	:	Pipeline Transportation Systems for Liquid Hydrocarbons and Other Liquids.
ASME B 31.8	:	Gas Transmission and Distribution Piping Systems.
ASME Sec. VIII Div. 1	:	Boiler and Pressure Vessels Code - Rules for Construction of Pressure Vessels.

AMERICAN PETROLEUM INSTITUTE (API)

API RP 1110	:	Pressure Testing of Steel Pipelines for the Transportation of Gas, Petroleum Gas, Hazardous Liquids, Highly Volatile Liquids or Carbon Dioxide.

PNGRB REGULATIONS:

G.S.R 808(E) T4S : Regulations for Natural Gas Pipelines

G.S.R. Infra/ T4S/ P&PPPL: Regulations for Petroleum and Petroleum products pipelines

G.S.R. 612(E) T4S : Regulations for CGD Network

Copyright VCS Quality Services Private Limited – All rights reserved

Digitally signed by RACHNA SHUKLA
Date: 2025.03.13 12:53:14 IST

2.2 In case of conflict between the various requirements of this specification and reference codes, standards, regulations and specifications mentioned above, more stringent requirement shall govern.

3.0 GENERAL REQUIREMENT

3.1 The Contractor shall ensure that the complete pipeline section undergoing hydrostatic test is mechanically complete in all respects, i.e welds have been accepted and the pipeline has been laid and backfilled, all mechanical and civil works completed. This has to be ensured keeping in view that, Once the section has been hydrotested, no one shall be authorized to re-open the pipeline section without prior approval of the company. Hydrostatic test shall include those sections which have been previously tested viz. Rail/ road crossings, major water crossings including test on banks and in place after installation.

3.2 Hydrostatic test shall be performed on the entire length of the pipeline in accordance with approved Hydrostatic Test procedure and Diagrams clearly indicating the number of test sections and minimum and maximum test pressures in each test sections. The maximum length of each test section shall not exceed 50 Kms.

3.3 For pipeline sections (i.e. River Crossing, Railway Crossing, HDD Crossing, National Highway Crossing, etc.) which in Company's opinion, once installed would require an inordinate amount of effort for repair in case of a leak, a provisional pre-test shall be conducted. However, after installation, such pre-tested sections shall be tested again along with the entire pipeline.

3.4 All works required for hydrostatic testing shall start only after obtaining prior approval from the Company.

3.5 The hydrostatic pressure testing operations shall be carried out by an experienced Test Engineer who shall have no other duty during the hydrostatic testing operations. The Test Engineer(s) shall be in full charge of all activities related to hydrostatic testing operations.

3.6 All headers, pre-test headers along with fittings, flanges and attachments shall be pre-tested before putting these for testing purpose.

4.0 TEST PROCEDURE

The Contractor shall submit a comprehensive hydrostatic test procedure to the Company for approval. The procedure shall also include all temporary materials and equipment to successfully complete hydro testing, but not be limited to the followings:

a) A diagram for the system to be tested, indicating all fittings, vents, valves, temporary connection, relevant elevations and ratings. The diagram shall also indicate injection locations and intake and discharge lines.

b) A diagram indicating the lengths, elevation charts, and locations of the test sections.

c) Pipeline details of the test section pipe diameter, wall thickness and material

Copyright VCS Quality Services Private Limited – All rights reserved

Digitally signed by RACHNA SHUKLA
Date: 2025.03.13 12:53:14 IST

d) Source of water for testing and test water discharge location for each test section

e) Estimated quantity of water for filling and pressurizing

f) Details of chemicals/ inhibitors and the dosage

g) Cleaning, gauging, flushing, and filling procedures including type and number of pigs, details of gauging pig.

h) Procedures for Pig Tracking System (which shall be used in case of pig getting stuck inside pipeline).

i) Procedures for location and rectification of dents/ buckles/ other deformation, etc.

j) Temperature stabilization procedure.

k) Pressure testing procedure including all calculations and test section isolation details.

l) Procedure for detection, location and rectification of leaks.

m) Safety precautions and procedures.

n) Repair procedures for coating damage at thermocouple locations.

o) Formats to be used for recording the test data.

p) Procedure for dewatering and neutralization of corrosion inhibitor of the pipeline sections(s) after testing.

The Contractor shall not commence hydrostatic testing activities until the testing procedure is approved.

5.0 SAFETY PRECAUTIONS DURING THE HYDROTEST

The Contractor shall take all necessary safety precautions during the hydrotest. As a minimum, the following shall be taken during the hydrostatic test:

a) Provision shall be made for the installation of no-admittance signs to unauthorized personnel from the roads to the R.O.U.

b) Warning signs stating 'PIPELINE UNDER TEST-KEEP OFF" with local language translation shall be placed where the pipeline is uncovered, and particularly where the provisional traps/ test headers and stations are located. Such areas shall be suitably fenced in such a way as to prevent access of unauthorised personnel and no unauthorised personnel shall be closer than 40 m to the testing equipment or pipeline under test. Warning tapes and signboards shall also be placed near the crossings and regular intervals along the route to warn the public around those areas.

c) The test station shall be placed in such a location as to prevent it from being affected by a catastrophic failure in the test head.

Copyright VCS Quality Services Private Limited – All rights reserved

Digitally signed by RACHNA SHUKLA
Date: 2025.03.13 12:53:14 IST

d) Once dewatering is over the sectionalizing valves and other valve assemblies tested previously, shall be installed at locations shown in the drawings and in accordance with the procedures contained in the relevant specifications.

e) All thermocouples installed in the pipeline shall be removed and damage corrosion coating shall be repaired using Company approved materials and procedure.

6.0 TEST PRESSURE AND DURATION

6.1 TEST PRESSURE

Unless otherwise specified in the Contract, the minimum hydrostatic test pressure for different classes shall be as follows:

For pipeline handling hydrocarbon in gaseous phase:

Class 1	:	1.25 times the design pressure as per ASME 31.8
Class 2	:	1.25 times the design pressure as per ASME 31.8
Class 3 and Class 4	:	1.5 times the design pressure as per ASME 31.8

For pipeline handling hydrocarbon in liquid phase:

All Location	:	1.25 times the design pressure for pipeline Handling liquids including Liquefied Petroleum Gas (LPG).

The test pressure shall be generated at the highest point in the section under test. At any point in the test section, hoop-stress due to test pressure and static head shall not exceed 95% of the Specified Minimum Yield Strength (SMYS) of pipe material.

6.2 TEST DURATION

The duration of the hydrostatic test shall be 24 hours after thermal stabilization.

7.0 EQUIPMENT AND INSTRUMENTATION

The Contractor shall provide all necessary equipment and instrumentation for performing the work as stated in cleaning, flushing, filling, stabilizing, testing, dewatering procedures.

7.1 EQUIPMENT

The equipment to be provided shall include, but not be limited to, the following in sufficient numbers along with spares:

a) Pigs for cleaning, gauging, flushing and filling.

Cleaning pigs with spring loaded steel wire brushes. For internally coated pipes, the pigs shall be provided with nylon/polyurethane brushes. . The first Cleaning pig shall be equipped with pig tracking device with a minimum battery span of 72 hours.

•

Copyright VCS Quality Services Private Limited – All rights reserved

Digitally signed by RACHNA SHUKLA
Date: 2025.03.13 12:53:14 IST

- Four cup batching pigs / Bi Directional Pigs
- Magnetic Pigs
- Gauging pigs fitted with gauge plate.

b) The Contractor shall provide a sufficient number of pigs, including spares Fill pumps:

The Contractor shall determine the type and number of fill pumps in order to guarantee the following:

- Differential head : 20% greater than the maximum required
- Flow rate : Minimum ~~400~~ 200 m^3/hr; Maximum ~~1000~~ 500 m^3/hr for 24" and above pipeline.

:Minimum ~~200~~ 100 m^3/ hr; Maximum 400 m^3/ hr up to 18" Pipeline

If a single pump is used, a standby unit must be available.

c) Pressurizing pump:

Variable speed positive displacement pumps equipped with a stroke counter to pressurize the pipeline, capable of generating pressure of 20 bar (g) over and above the required test pressure of the section. Contractor shall also ensure availability of standby pressurizing pump.

d) Two Positive displacement meters/ Turbine meters to measure the volume of water used for filling the line. These meters shall be provided with a calibration certificate not older than three months.

e) Portable tanks/ Break tanks of sufficient size to provide a continuous supply of water to the pump during filling and pressurizing.

f) Injection facilities to inject chemicals/ inhibitors into the test medium in the required proportions.

g) The temporary test header shall be installed at both ends of section. Proper piping and valving arrangements shall be available to allow launching and receiving of each pig independently

The test heads shall be sized in conformity with ASME specification Section VIII, Division 2 with particular reference to Appendices 4 and 5.

7.2 INSTRUMENTATION

The instrumentation to be provided shall include, but not be limited to, the following in sufficient numbers along with spares:

a) Calibrated Bourdon pressure gauges of suitable pressure range and accuracy.

b) Dead weight testers with an accuracy of 0.01 bar, measuring with least count of 0.05 bar and provided with a calibration certificate not older than three months.

Copyright VCS Quality Services Private Limited – All rights reserved

Digitally signed by RACHNA SHUKLA
Date: 2025.03.13 12:53:14 IST

c) 48 hours recording pressure gauges complete with pressure recording charts duly tested with dead weight tester prior to use. These shall be installed at the test head. The gauge shall having following specification:

Accuracy	:	± 0.1% of the full-scale value
Recording	:	continuous on tape or disk, graph width 100 mm
Feed	:	7.5 °/ hr for disk diagrams, 20 mm/ hr for tape diagrams
Recording	:	Range to be such as to record pressure between 50% and 90% of the diagram width

d) Temperature recorders for fill water.

Accuracy	:	± 1% of the scale range
Scale		-10 °C to +40 °C
recording	:	continuous on tape or disk, graph width 100 mm
Feed	:	7.5 °/ hr for disk diagrams, 20 mm/ hr for tape diagrams

e) Environmental temperature shall be recorded from the beginning of pressurization to the end of the test by means of a recording thermometer featuring the following characteristics:

Accuracy	:	± 1% of the scale range
Scale		- 0 °C to + 60 °C
Recording	:	continuous on tape or disk, graph width 100 mm
Feed	:	7.5 °/ hr for disk diagrams, 20 mm/ hr for tape diagrams

f) Thermocouples for measuring the pipe wall temperatures, with an accuracy of ±0.1 °C

g) Two laboratory thermometers of range 0 °C to 60 °C and with accuracy of ±0.2 °C to be used in thermo wells.

h) Means to measure the volume of water necessary to drop the line pressure by 0.5 bar (container with scales or graduated cylinder).

i) Injection facilities to inject additives into the test medium in the required proportions.

j) Communications equipment stable for a continuous connection between the beginning and the end of test section and with the inspection team along the line, in accordance with the requirements of local authorities.

k) The temporary scraper traps shall be installed according to the test section fixed in the test procedure manual. Proper piping and valve arrangements shall be available to

Copyright VCS Quality Services Private Limited – All rights reserved

Digitally signed by RACHNA SHUKLA
Date: 2025.03.13 12:53:14 IST

allow launching and receiving of each pig independently.

The test heads shall be sized in conformity with ASME specification Section VIII, Division 2.

l) Thermocouples for measuring the temperature of the pipe wall shall be installed on the pipeline to be tested at the following locations:

- One (1) thermocouple at about 500 m distance from the pumping head.
- One (1) thermocouple every 2500 m of the pipe. The spacing may be increased to maximum 5000 m depending on the terrain and nature of sub soil along the alignment of test section.
- One (1) thermocouple at about 500 m distance from the terminal head

Thermocouples shall be attached on the external surface of the pipe after removal of external coating and shall be adequately protected by padding with minimum 500 mm soil. After successful testing, the thermocouples shall be removed and damaged coating shall be repaired as per applicable coating repair procedure, approved by Company. For soil temperature measurements, the thermocouple shall be buried at pipe centerline depth at a distance of 500 mm from the pipe wall.

m) Digital pressure/ temperature monitoring and chart recording systems can be used in lieu of the components listed above provided that the individual pressure/ temperature sensors included in the system have a level of accuracy and can be field calibrated in a manner similar to those instruments listed above. Instruments shall be portable and rugged in construction with minimum weather proof rating of IP-66. They shall display pressure and temperature readings on the screen and shall have adequate memory for recording the same. The instrument shall have computer interface to export the stored data after completion of test.

8.0 HYDROSTATIC TESTING

8.1 Equipment and/ or parts which need not or must not be subjected to the test pressures or which must not be tested with water, must be disconnected or separated from the pipeline to be tested.

8.2 If the difference of minimum and maximum atmospheric temperature should cause thermal instability on the pipe section directly exposed to atmospheric condition, the test header and above ground pipeline shall be properly protected.

The pipeline test shall exclude long segments of line exposed to atmospheric conditions, viz. aerial lengths on piers, suspension bridges, etc. Such sections shall be tested separately.

8.3 TEST MEDIUM

The test medium shall be soft non-aggressive water supplied by the Contractor. The water to be used shall be filtered, shall not be contaminated and free from sand of silt. Contractor shall submit laboratory test reports of water used for testing. The possible use of sea water shall be subjected to its degree of cleanness, the possibility of obtaining a pre-determined salinity neutralization. The

Copyright VCS Quality Services Private Limited – All rights reserved

Digitally signed by RACHNA SHUKLA
Date: 2025.03.13 12:53:14 IST

Contractor shall furnish and install all temporary piping, which may be necessary to connect from source of water to its pump and manifolds/ tankages.

8.4 INHIBITORS

Contractor shall provide Company approved corrosion inhibitors, oxygen scavengers and bactericides to be added to the test water.

Contractor shall note the following:

- All chemicals for hydro testing shall be procured from approved vendors. Chemicals olders than three months shall not be used.
- Company representative shall inspect the chemical containers and take random samples prior to its use. Contractor shall get the samples tested in an govt nominated Govt./PSU/other competent laboratories. Contractor shall get the samples tested, testing shall be carried out for accelerated % corrosion inhibition efficiency, % SRB and TBC killing efficiency test. Company reserves the right to witness the testing. The test report shall be submitted to Company for approval prior to undertaking hydro testing works.
- Only those chemicals which have passed the above tests shall be used for hydro testing.
- Chemicals shall be injected by dosing pump only and mixing in open tank shall not be allowed.

Inhibitors shall be uniformly mixed with the test water in the dosage recommended by the Manufacturer depending upon the water used and in sufficient concentration to ensure the inhibitor remains active for the duration of the test, and any possible delays to testing.

The following products are acceptable for corrosion inhibition of the water used for hydro testing:

- REMIDOL 4000 of M/s Chemtreat India Ltd., Navi Mumbai.
- HIBITOL 2000 of M/s Renkal Chemical, Navi Mumbai.
- INDION 175 of M/s Ion Exchange India Ltd., Hyderabad.
- VISCO 3900 of M/s NALCO EXXON

Indicative dosage for inhibitor is as follows:

- Upto 6 months : 500 mg/l
- Above 6 months : 750 mg/l

However, the exact dosage rates shall be as per the hydro test water analysis and manufacturer recommendations.

8.5 CLEANING

Before filling operation, the Contractor shall clean the pipeline by air driven pigs

Copyright VCS Quality Services Private Limited – All rights reserved

Digitally signed by RACHNA SHUKLA
Date: 2025.03.13 12:53:14 IST

provided with spring loaded nylon/polyurethane brushes for internal coated Pipes & wire brush cleaning pigs for internal uncoated pipes to remove all mill scale, rust, sand, etc. from the inside of pipe section. For this purpose, temporary headers for air cleaning shall be attached to the pipeline. The number of pig runs depends upon the cleaning results and shall be determined by the Owner/ Consultant at site.

Water column of 1- 2% of test section shall be injected in front of the first cleaning Pig for flushing.

8.6 Magnetic Pigging

After the successful acceptance of cleaning, Magnetic pig run shall be used to clean "constructional metallic debris" of the pipeline.

For internally coated pipes, adequate care shall be taken by using soft cups so that no damage takes place to the internal coating of the pipe.

Contractor shall decide the number of magnet cleaning pig runs and the choice of the magnet cleaning pig for each cleaning run as suitable for the purpose to obtain internal condition adequately clean.

However, the ferrous debris permitted with magnetic cleaning pig shall not exceed 5 Kg/100KM. In case debris received is more than this amount, the Contractor shall be required to make subsequent run(s) until at least the above limit is achieved.

The cleaning pigs for successive cleaning pig runs shall be selected by the Contractor in such a manner that effective cleaning i.e. 3kg/100km ferrous debris is achieved.

The best accuracy offered and guaranteed by the Contractor shall be clearly spelt out. However, the tool should have minimum capabilities as under.

Type of pig: Uni-directional

Magnet power: Min 800 gauss

Nos. of magnets: 8/6 nos.

Min. bend radius pig can negotiate: 6D

Min dia pig can negotiate: 90% standard wall thickness ID

8.7 GAUGING

After cleaning the pipeline by using air and acceptance by Company, gauging shall be carried out by using gauging pig. The gauge plate diameter shall be equal to 95% of inside diameter of the heaviest wall pipe in the test section. While computing the Inside Diameter (ID) of heaviest wall pipe, pipe manufacturing tolerances shall not be considered. A 10 mm thick aluminum plate shall be used for making gauge plate. The gauging plates shall have 8 radial incisions at 45

Copyright VCS Quality Services Private Limited – All rights reserved

Digitally signed by RACHNA SHUKLA
Date: 2025.03.13 12:53:14 IST

degree interval. Compressed air shall be used to run Gauging pig.

After receipt of gauging pig at the other end, the gauge plate shall be inspected in the presence of Company representative. A deformed, bent or severally nicked plate or damaged pig shall be evidence of gauging pig run failure and the same shall not be acceptable to COMPANY. In such cases, the Contractor shall locate any obstruction and/ or faults such as dents, buckles, flat spots, etc. and rectify the same to the satisfaction of the Company. A written approval shall be obtained from Company regarding successful completion of gauging pig run. Photographs of the Gauge Plate before and after the gauging run shall be taken and included in the inspection report.

After acceptance of gauging operation, air header shall be cut and removed. Pre-tested test headers loaded with three numbers of four cup batching pigs shall be welded to test section.

The drawing of the test headers shall be submitted along with hydrotest procedure for approval. All fittings and flanges to be used in the test header fabrication shall be at least one ANSI rating higher than the line rating. The headers shall be pretested at line hydrotest pressure for duration of minimum 24 hours. The record shall be kept and shall be part of the final hydro test report.

8.8 WATER FILLING

After acceptance of gauging run, water filling of the testing section shall commence. For this purpose, pretested test headers loaded with three numbers of four cup batching / Bi –Directional pigs shall be welded to the test section. Weld joints between test header and pipeline shall be radiographed and accepted before filling operation starts.

Un-inhibited water equal to 10% of the volume of test section shall be filled ahead of the first pig. The first batching pig shall be launched using minimum un-inhibited water equivalent to 1.5 Km of test section for longer sections and 0.5 Km for short sections below 10 Km. Then the second pig shall be launched using inhibited water till the second pig is received at the other end. The Contractor shall continuously monitor the volume and pressure, the temperature of the fill water during the filling operation. When it has been confirmed that the filling pigs have arrived in the receiving test header, the thermal stabilization and pressurization operations can commence subsequently.

The temperature of the fill water should be recorded as it is introduced into the pipeline. This will aid in the determination of line temperature stability. Additionally, the flow rates and pressures should also be recorded or monitored to protect the pipeline from an over pressure situation.

8.9 THERMAL STABILIZATION

After a check has been made to confirm if the pressure has attained minimum 1 bar (g) on the highest section, the thermal stabilization can be started.

Thermal equilibrium between the pipeline and environment shall be checked through the Thermocouples installed on the pipeline and in the soil.

Copyright VCS Quality Services Private Limited – All rights reserved

Digitally signed by RACHNA SHUKLA
Date: 2025.03.13 12:53:14 IST

Temperature readings shall be made at 2 hours-intervals. Thermal stabilization shall be considered to have been achieved when a difference not higher than 1 °C is attained between the average values of the last two readings.

Thermal stabilization completion shall be approved by Company.

8.10 PRESSURIZATION

8.10.1 The pressurization shall be performed in the presence of Company at a moderate and constant rate not exceeding 2 bars/ min. One pressure recording gauge shall be installed in parallel with the dead weight tester. Volume required to reach the test pressure shall be recorded periodically throughout the pressurization as follows:

- Each 5 bar increments up to 80% of test pressure as recorded by the dead weight tester
- Each 2 bar increments between 80% to 100% of test pressure as recorded by the dead weight tester
- It is preferable for a pressure–volume plot to be initiated at the start of the pressurization process and continued until the test pressure is reached. The lower end of the pressure–volume plot can be used to determine the total amount of residual air in the test section. The upper end of the pressure volume plot can be used to determine if any pipe in the test segment may have reached its elastic limit.

8.10.2 The pressurization shall be cycled according to the following sequence:

- Pressurize to 50% of test pressure, hold pressure for 1 hour,
- Drop pressure to 10% of test pressure of test section at test head,
- Pressurize to 75% of test pressure, hold pressure for 1 hour
- Drop pressure to 10% of test pressure of test section at the test head
- Pressurize to test pressure.

During the pressurization to each test pressure (50% & 75%), two tests shall be carried out for the calculation of air volume in the pipeline under test.

In case, during the hold pressure periods indicated above, a decrease in pressure is observed, the above operations shall not be repeated more than twice, after which the line shall not be considered capable of test, until the Contractor has isolated and eliminated the cause for the lack of water tightness.

8.11 AIR VOLUME CALCULATION.

Two separate consecutive pressures lowering of 0.5 bar shall be carried out after pressurizing to test pressure in order to check the presence of air in the pipeline.

For calculation of air in the pipeline the second pressure lowering shall be used, and the relevant drained water shall be accurately measured (V_1). This amount measured shall be compared to the theoretical amount (Vp) corresponding to the pressure lowering that has been carried out, by using the procedure outlined in clause 9.1 of this specification.

Copyright VCS Quality Services Private Limited – All rights reserved

Digitally signed by RACHNA SHUKLA
Date: 2025.03.13 12:53:14 IST

If no air is present in the length under test, then $\frac{V1}{Vp} = 1$

In order that the above ratio is acceptable, it shall not differ by more than 6% (i.e. 1.06). If the air found in the pipeline is within the above established tolerance, then the pressurizing can continue. If the ratio VI / Vp exceeds 1.06, the hydrostatic testing cannot go on and additional pig passages shall be performed to remove the air pockets.

The test shall be repeated as per the above procedure until above estimated tolerances are satisfied. The pressurizing can then continue, to reach the value of the test pressure.

8.12 TESTING

The section shall be pressurized to the test pressure after the air volume test has given acceptable results. When temperature and pressure has stabilized, the injection pump, pressuring pump shall be disconnected and all connections at the test heads shall be checked for leakage. The test pressure shall be held for a minimum of 24 hours after stabilization. The pressure recorders shall then be started with the charts in a real time orientation for continuous recording throughout the test.

During the testing period the following measurements shall be recorded

- Pressure measurements from dead weight tester: Every hour
- Soil temperature and the pipe temperature at the thermocouples: Every two hours

All data shall be recorded on appropriate forms attached to the hydrostatic test procedure manual. Care shall be taken that the maximum test pressures are not exceeded. Bleed-off water shall be accurately measured and recorded.

8.13 MEASUREMENTS

8.13.1 WATER AMOUNT MEASUREMENT

The quantity of water added to the test section shall be measured during the filling stage through a positive displacement meter (a turbine meter may also be used).

The quantity of water added during pressurization shall be measured during the pressurization stages.

8.13.2 PRESSURE MEASUREMENT

Pressure shall be measured with a dead weight tester that shall permit readings with least count of 0.05 bar. The pressure shall also be recorded by means of a recording pressure gauge. The recording pressure gauge shall be checked by means of a dead weight tester at the beginning, during and at the end of the hydrostatic test.

Accuracy	:	± 0.1% of the full-scale value
Recording	:	Continuous on tape or disk, graph width 100mm

Copyright VCS Quality Services Private Limited – All rights reserved

Digitally signed by RACHNA SHUKLA
Date: 2025.03.13 12:53:14 IST

Feed	:	20mm/h for tape diagrams, 15°/h for disk diagrams
Recording range	:	To be such as to record pressure between 50% and 90% of the diagram width.

8.13.3 TEMPERATURE MEASUREMENT

- Water temperature shall be taken at every 2 hours through the thermocouples that have been installed on the pipe wall along the section.

  In addition, the temperature measurement shall be taken during filling operation, thermal stabilization stage and during the pressure hold period.

  The thermocouples' sensitivity shall enable temperature readings with the accuracy of ±0.1°C.

- Water temperature shall also be measured at the pump delivery through a recording thermometer throughout the filling stage.

  The recording thermometer shall feature the following characteristics:

Accuracy	:	± 1% of the scale range
Scale	:	-10° to +40°C
Recording	:	Continuous on tape or disk, diagram width 100mm
Feed	:	20mm/h for tape diagrams, 15°/h for disk diagram

- Ground temperature shall be taken by measuring soil temperature at the thermocouples prior to starting the filling operation.
- Ambient temperatures shall be recorded from the beginning of pressurization to the end of the test by means of a recording thermometer.

Accuracy	:	± 1% of the scale range
Scale	:	0° to +60°C
Recording	:	Continuous on tape or disk, diagram width 100mm
Feed	:	20mm/h for tape diagrams, 15°/h for disk diagrams.

9.0 CALCULATIONS

9.1 The theoretical water amount that is necessary for filling the section to be tested shall be obtained from the geometrical volume of the section considering the pipe tolerances.

The theoretical water amount that is necessary for pressurizing the section shall be calculated by means of the following formula:

$$Vp = \left(0.884\frac{ri}{t} + A\right) X\ 10^{-6}\ X\ (Vt)\ X\ (\Delta P)\ X\ K$$

Where:

Vp = computed water amount required to raise by P the pressure in the section to be tested (m^3)

Copyright VCS Quality Services Private Limited – All rights reserved

Digitally signed by RACHNA SHUKLA
Date: 2025.03.13 12:53:14 IST

V_t = geometrical volume of the section (m^3)

ΔP = pressure rise (bar)

r_i = nominal inner radius of the pipe (mm)

t = nominal pipe thickness (mm)

A = Isothermal compressibility value for water at the pressurization temperature in the P range (bar^{-1}) x 10^6(Refer water compressibility factor v/s pressure and temperature charts. For temperature above 30°C the values may be extrapolated.)

K = A dimensionless coefficient that is equal to a value of 1.02 for longitudinally welded pipe.

9.2 The pressure change due to a water temperature change shall be calculated through the following formula:

$$\Delta P = \frac{B}{0.884\ \frac{r_i}{t} + A}\ \Delta T$$

Where:

ΔP = Pressure change resulting from a temperature change (bar)

ΔT = Algebraic difference between water temperature at the beginning of the test and water temperature as measured at the end of the test (°C).

B = Value of the difference between the thermal expansion of water at the pressure and temperature as measured at the end of the test and that of steel ($°C^{-1}$ x10^6) (Refer Table1)

A = Isothermal compressibility value of water as estimated at the pressure and temperature values obtained at the end of test (Refer Figure 1)

K = A dimensionless coefficient that is equal to a value of 1.02 for longitudinally welded pipe.

ri = nominal inner radius of the pipe (mm)
(In case of the test section having multiple wall thicknesses, "ri" shall correspond to the wall thicknesses, having the maximum total length in the given test section.

t = nominal pipe thickness (mm)

10.0 ACCEPTANCE

10.1 The hydrostatic test shall be considered as positive if pressure has kept a constant value throughout the test duration, except for change due to temperature effects. Such changes shall be evaluated as described under clause 9.2 of this

Copyright VCS Quality Services Private Limited – All rights reserved

Digitally signed by RACHNA SHUKLA
Date: 2025.03.13 12:53:14 IST

specification.

The pressure change value as a function of temperature change shall be algebraically added to the pressure value as read on the meters. The pressure value thus adjusted shall be compared with the initial value and the test shall be considered as acceptable if the difference is less than or equal to 0.3 bar. In case of doubt the testing, period shall be extended by 24 hours.

10.2 If test section fails to maintain the specified test pressure after isolation, Contractor shall determine the location of leakage or failure by suitable means. All leaks and failures within the pipe wall or weld seams shall be repaired by replacement of entire joint or joints in which leakage or failure occurs. In those cases where leaks occur in circumferential welds, the method of repair shall be determined by the Company. Contractor shall comply with instructions of the Company whether to replace a section of the line pipe that includes the line leak or whether to repair the circumferential weld. This repair should, however, meet the requirements of applicable welding specification enclosed with the Contract. Where failures occur in pipeline field bends, bends shall be replaced with same degree of bends. After completion of repairs, the hydrostatic test shall be repeated in full, as per this specification.

10.3 The cost of repairs or replacements, followed by refilling and depressurizing the line, due to poor workmanship, shall be borne by the Contractor. In the event of leaks or failures resulting from faulty Company furnished materials, Contractor shall be reimbursed as per the provisions of Contract. All work of reinstalling line pipe, to replace failures, shall be done in accordance with the relevant specifications included in the CONTRACT.

10.4 Contractor shall haul and stockpile all damaged and defective pipes to storage location designated by the Company. All cracks and splits resulting from failure shall be coated with an application of grease to preserve the characteristics of failures from corrosion. Joint of failed pipes shall be marked with paint, with a tag indicating failure details, date and location of failure and pressure at which failure occurred. Failed pipes shall have pipe number and heat number clearly marked on the outside surface along with warning sign to prevent re-usage.

11.0 TERMINATION

After the positive result of testing and all the data have been gathered, the test shall be terminated upon written approval given by the Company. The pipeline shall be slowly depressurized at a moderate and constant rate as instructed by Company. Subsequent operations such as installation of sectionalizing valves, caliper pigging, swabbing, pre-commissioning checks, purging/ inertising and commissioning shall be carried out as per the relevant specifications.

11.1 All thermocouples installed in the pipeline shall be removed and damaged coating shall be repaired using Company approved materials and procedure.

11.2 Contractor shall dewater the tested line as per the following requirement after test acceptance.

Copyright VCS Quality Services Private Limited – All rights reserved

Digitally signed by RACHNA SHUKLA
Date: 2025.03.13 12:53:14 IST

The dewatering shall be carried out by using four cup pigs and foam pigs driven by compressed air. The detailed dewatering procedure shall be deployed by the Contractor in such a way as to provide adequate control of pigs during dewatering. Pigs and equipment required for dewatering the line shall be furnished by Contractor and shall be approved in advance by the Company. Four cup pigs run shall be made through the line to displace the water. Foam pigs shall then be passed in order to complete the line dewatering. Contractor shall use a number of foam pigs each in different colors/ numbered for this purpose. The line shall be considered dewatered when a negligible amount of water is flushed out by the last foam pig and approval is given by the Company.

11.3 During dewatering, care shall be taken to properly dispose the discharging water in order to avoid pollution, damages to fields under cultivation and/ or existing structures and interference with the traffic. Before the start of dewatering and disposal of hydro test water, a procedure for treatment of inhibited water to prevent pollution shall be submitted by Contractor to Company for review and approval.

11.4 Upon completion of the testing and dewatering operation, any provisional traps/ headers for pigs and all other temporary installation relating to the test shall be removed. Subsequently, the individual sections of the line already tested shall be joined in accordance with the requirements of relevant specifications issued for the purpose.

12.0 TEST REPORT

A complete report signed by Contractor and the Company shall be submitted upon completion of the hydrostatic test for each test section.

This report shall contain as a minimum:

- Pressure at high and low elevations;
- Elevation & Pressure at test point;
- Water test certificate;
- Inhibitor test certificate;
- The cleaning, gauging, flushing, filling and testing procedures used;
- Schematic layout of cleaning, filling and testing facilities;
- Section Elevation Plot;
- Equipment's and Instruments calibration certificate;
- A profile of the pipeline that shows the test sites, all instrument and injection connections;
- Pipe filling logs and records;
- Additive specification, required concentration and additive injection records;
- Pig specifications;
- Pig inspection records including photographs of the damages; records of gauging pig survey and photographs;
- Pressurization and stabilization records;
- Pressure and temperature recording charts with appropriate information

Copyright VCS Quality Services Private Limited – All rights reserved

Digitally signed by RACHNA SHUKLA
Date: 2025.03.13 12:53:14 IST

inscribed thereon;

- Temperature data along the pipeline;
- Dead weight tester logs and recordings;
- Air volume calculations;
- Pressure Vs Volume plot
- Pressure changes due to temperature change calculations;
- Environmental data;
- Depressurization logs and records;
- Dewatering procedure and schematic layout of relevant facilities; dewatering logs and records;
- Records and photographs of all leaks, if applicable.

13.0 PRESERVATION OF PIPELINE

When so stated in the CONTRACT, to preserve/ conserve the pipeline for a specified duration, Contractor shall completely fill the pipeline with water, with sufficient quantity of corrosion inhibitors depending upon quality of water and the period of conservation, at a pressure as per relevant specification/ Contract. Contractor shall obtain necessary approval from the Company of the procedure, type and quality and quantity of inhibitors used before commencement of the works.

14.0 PRECAUTIONS DURING THE TEST

In addition to all that has been expressly described in the procedures for carrying out the tests, the following additional requirements shall be complied with:

1. Provision shall be made for the installation of no-admittance signs to unauthorised personnel from the roads to the R.O.U.

2. Signs stating 'PIPE UNDER TEST-KEEP OFF" with local language translation shall be placed where the pipeline is uncovered, and particularly where the provisional traps and stations are located. Such areas shall be suitably fenced in such a way as to prevent access of unauthorised personnel. No unauthorised personnel shall be closer than 40M to the pipeline or equipment under test.

3. Provisional scraper traps shall be installed in compliance with methods and suitable location so that their rupture cannot cause any injuries to the personnel or third parties

4. The test station shall be placed in such a location as to prevent it from being affected by a catastrophic failure in the test head.

5. Once dewatering is over the sectionalising valves and other valve assemblies tested previously, shall be installed at locations shown in the drawings and in accordance with the procedures contained in the relevant specifications. All thermocouples installed in the pipeline shall be removed and damaged corrosion coating shall be repaired using Company approved materials and procedure.

Copyright VCS Quality Services Private Limited – All rights reserved

Digitally signed by RACHNA SHUKLA
Date: 2025.03.13 12:53:14 IST

15.0 DOCUMENTATION

PRIOR TO COMMENCEMENT OF HYDROSTATIC TEST

The Contractor shall furnish the Hydrostatic Test Procedure at least six weeks prior to commencement of hydrostatic test operations for the approval of the Company Representative. Hydrostatic test operations shall commence only after obtaining written approval from Company.

Prior to commencement of the testing, copies of certifications, calibrations, etc of any equipment/ instrumentation to be incorporated in the test set-up shall be submitted to the Company Representative.

ON COMPLETION OF HYDROSTATIC TEST

The Contractor shall furnish the Test Report duly signed by both the Contractor and the Company Representative, immediately upon completion of successful hydrostatic test.

Copyright VCS Quality Services Private Limited – All rights reserved

Digitally signed by RACHNA SHUKLA
Date: 2025.03.13 12:53:14 IST

TABLE 1: DIFFERENCE BETWEEN THE WATER THERMAL EXPANSION FACTOR AND THE STEEL THERMAL EXPANSION

FACTOR ($°C^{-1}$ x10^{6})

°C bar	1	2	3	4	5	6	7	8
0.981	-98.62	-79.89	-61.81	-44.34	-27.47	-11.14	4.66	19.98
10	-95.55	-76.94	-58.99	-41.65	-24.89	-8.67	7.02	22.23
20	-92.15	-73.68	-55.86	-38.64	-22.01	-5.92	9.65	24.74
30	-88.74	-70.4	-52.72	-35.63	-19.14	-3.16	12.29	27.26
40	-85.32	-67.12	-49.58	-32.62	-16.24	-0.41	14.93	29.78
50	-81.9	-63.84	-46.43	-29.6	-13.36	2.36	17.57	32.31
60	-78.47	-60.55	-43.27	-26.58	-10.46	5.15	20.23	34.85
70	-75.03	-57.25	-40.1	-23.54	-7.56	7.92	22.89	37.89
80	-71.6	-53.96	-36.94	-20.51	-4.65	10.7	25.55	39.94
90	-68.16	-50.66	-33.77	-17.47	-1.73	13.5	28.23	42.5
100	-64.72	-47.35	-30.6	-14.43	1.18	16.29	30.9	45.05
110	-61.28	-44.05	-27.43	-11.38	4.1	19.08	33.58	47.67
120	-57.84	-40.74	-24.26	-8.34	7.02	21.88	36.26	50.18
130	-54.4	-37.44	-21.08	-5.29	9.95	24.68	38.94	52.75
140	-50.96	-34.13	-17.9	-2.25	12.87	27.49	41.63	55.32
150	-47.53	-30.83	-14.73	0.8	15.79	30.29	44.31	57.89
160	-44.1	-27.53	-11.56	3.85	18.72	33.1	47	60.46
170	-40.67	-24.23	-8.4	6.89	21.64	35.9	49.69	63.04
180	-37.24	-20.94	-5.23	9.94	24.56	38.7	52.37	65.62
190	-33.83	-17.65	-2.06	12.98	27.48	41.51	55.06	68.19
200	-30.42	-14.37	1.09	16.01	30.4	44.3	57.75	70.77
210	-27.02	-11.09	4.25	19.04	33.31	47.1	60.43	73.34
220	-23.63	-7.82	7.4	22.06	36.22	49.9	63.12	75.9
230	-20.24	-4.56	10.54	25.08	39.13	52.69	65.8	78.48
240	-16.87	-1.3	13.67	28.1	42.03	55.48	68.48	81.05
250	-13.5	1.94	16.79	31.11	44.92	58.26	71.15	83.61
260	-10.14	5.17	19.9	34.12	47.81	61.04	73.81	86.81
270	-6.8	8.39	23	37.11	50.69	63.8	76.48	88.73
280	-3.48	11.6	26.11	40.09	53.56	66.57	79.14	91.29
290	-0.17	14.8	29.19	43.07	56.43	69.33	81.78	93.83
300	3.13	17.98	32.27	46.03	59.29	72.08	84.83	96.38

Copyright VCS Quality Services Private Limited – All rights reserved

Digitally signed by RACHNA SHUKLA
Date: 2025.03.13 12:53:14 IST

TABLE 1: DIFFERENCE BETWEEN THE WATER THERMAL EXPANSION FACTOR AND THE STEEL THERMAL EXPANSION

FACTOR ($°C^{-1}$ x10^{6})

°C bar	9	10	11	12	13	14	15	
0.981	34.82	49.22	63.2	76.78	89.99	102.83	115.34	
10	36.97	51.26	65.15	78.64	91.75	104.51	116.93	
20	39.36	53.55	67.33	80.71	93.72	106.39	118.71	
30	41.76	55.84	69.51	82.79	95.7	108.26	120.49	
40	44.18	58.14	71.7	84.87	97.68	110.14	122.28	
50	46.6	60.45	73.9	86.96	99.68	112.04	124.07	
60	49.02	62.76	76.1	89.07	102.67	113.93	125.88	
70	51.44	65.08	78.32	91.17	103.68	115.84	127.69	
80	53.88	67.4	80.53	93.29	105.69	117.76	129.5	
90	56.32	69.73	82.75	95.41	107.7	119.67	131.32	
100	58.77	72.07	84.98	97.53	109.73	121.59	1333.15	
110	61.21	74.41	87.22	99.66	111.75	123.52	134.98	
120	63.67	76.74	89.45	101.79	113.79	125.46	136.82	
130	66.12	79.09	91.69	103.93	115.83	127.39	138.67	
140	68.58	81.45	93.93	106.07	117.87	129.34	140.51	
150	71.05	83.8	96.18	108.21	119.9	131.2	142.37	
160	73.51	86.15	98.43	110.36	121.96	133.74	144.22	
170	75.97	88.51	100.68	112.51	124.01	135.19	146.08	
180	78.44	90.87	102.94	114.66	126.06	137.15	147.94	
190	80.91	93.23	105.19	116.82	128.12	139.11	149.81	
200	83.37	95.59	107.45	118.97	130.17	141.07	151.68	
210	85.84	97.95	109.71	121.13	132.24	143.03	153.55	
220	88.3	100.31	111.97	123.29	134.29	144.99	155.42	
230	90.67	102.67	114.23	125.45	136.36	146.96	157.3	
240	93.22	105.03	116.48	127.6	138.42	148.93	159.18	
250	95.69	107.39	118.74	129.76	140.48	150.9	167.05	
260	98.14	109.74	121	131.92	142.54	152.87	162.93	
270	100.6	112.1	123.25	134.08	144.61	154.84	164.81	
280	103.05	114.44	125.5	136.24	146.67	156.84	166.69	
290	105.5	116.79	127.75	138.39	148.73	158.78	168.57	
300	107.94	119.13	130	140.54	150.79	160.75	170.45	

Copyright VCS Quality Services Private Limited – All rights reserved

Digitally signed by RACHNA SHUKLA
Date: 2025.03.13 12:53:14 IST

TABLE 1: DIFFERENCE BETWEEN THE WATER THERMAL EXPANSION FACTOR AND THE STEEL THERMAL EXPANSION

FACTOR ($°C^{-1}$ x10^{6})

°C bar	16	17	18	19	20	21	22	23
0.981	127.52	139.41	151	162.3	173.37	184.18	194.75	205.08
10	129.02	140.83	152.36	163.6	174.56	185.3	195.79	206.07
20	130.71	142.42	153.85	165	175.9	186.55	196.96	207.16
30	132.4	144.02	155.35	166.4	177.23	187.8	198.14	208.26
40	134.1	145.62	156.87	167.9	178.58	189.07	199.33	209.37
50	135.8	147.24	158.39	169.3	179.93	190.34	200.52	210.49
60	137.51	148.86	159.92	170.7	181.29	191.62	201.72	211.61
70	139.22	150.49	161.46	172.2	182.66	192.91	202.93	212.74
80	140.95	152.11	163	173.6	184.03	194.2	204.14	213.88
90	142.67	153.75	164.56	175.1	185.41	195.5	205.36	215.03
100	144.42	155.4	166.11	176.6	186.8	196.8	206.59	216.17
110	146.15	157.04	167.66	178.1	188.2	198.12	207.82	217.33
120	147.9	158.7	169.24	179.5	189.59	199.44	209.06	218.49
130	149.65	160.36	170.81	181	191	200.75	210.31	219.66
140	151.4	162.03	172.39	182.5	192.41	202.09	211.56	220.84
150	153.16	163.7	173.98	184	193.82	203.42	212.81	222.02
160	154.93	165.37	175.56	185.5	195.24	204.76	214.08	223.2
170	156.69	167.05	177.15	187	196.66	206.1	215.34	224.39
180	158.47	168.73	178.75	188.5	198.09	207.45	216.61	225.58
190	160.24	170.42	180.35	191.1	199.52	208.8	217.89	226.79
200	162.01	172.1	181.95	191.6	200.97	210.16	219.17	227.99
210	163.8	173.8	183.55	193.1	202.4	211.53	220.46	229.2
220	165.58	175.49	185.16	194.6	203.85	212.89	221.74	230.41
230	167.36	177.19	186.78	196.1	205.3	214.26	223.04	231.63
240	169.16	178.89	188.39	197.7	206.75	215.63	224.32	232.85
250	170.94	180.59	190.01	199.2	208.2	217	225.63	234.08
260	172.73	182.3	191.63	200.8	209.66	218.4	226.93	235.31
270	174.53	184	193.25	202.3	211.12	219.77	228.24	236.54
280	176.32	185.7	194.88	203.8	212.59	221.16	229.55	237.77
290	178.11	187.42	196.5	205.4	214.05	222.54	230.86	239.01
300	179.9	189.13	198.13	206.9	215.51	223.93	232.18	240.26

Copyright VCS Quality Services Private Limited – All rights reserved

Digitally signed by RACHNA SHUKLA
Date: 2025.03.13 12:53:14 IST

TABLE 1: DIFFERENCE BETWEEN THE WATER THERMAL EXPANSION FACTOR AND THE STEEL THERMAL EXPANSION

FACTOR ($°C^{-1}$ x10^{6})

°C bar	24	25	26	27	28	29	30	
0.981	215.2	215.14	234.88	244.41	253.79	263	272.03	
10	216.1	225.99	235.66	245.13	254.44	263.59	272.57	
20	217.2	226.94	236.53	245.94	255.18	264.27	273.18	
30	218.2	227.88	237.41	246.75	255.93	264.95	273.8	
40	219.2	228.85	238.3	247.58	256.69	265.64	274.42	
50	220.3	229.82	239.2	248.4	257.45	266.33	275.07	
60	221.3	230.79	240.11	249.24	258.22	267.04	275.7	
70	222.4	231.78	241.02	250.08	258.99	267.75	276.35	
80	223.4	232.77	241.94	250.93	259.78	268.47	277.01	
90	224.5	233.76	242.87	251.79	260.57	269.19	277.66	
100	225.6	234.76	243.79	252.66	261.36	269.92	278.33	
110	226.6	235.78	244.73	253.53	262.17	270.77	279.01	
120	227.7	236.79	245.68	254.4	262.98	271.41	279.69	
130	228.8	237.81	246.63	255.28	263.69	272.16	280.38	
140	229.9	238.84	247.59	256.18	264.62	272.92	281.08	
150	231	239.87	248.55	257.07	265.44	273.69	281.78	
160	232.1	240.91	249.52	257.97	266.28	274.46	282.49	
170	233.3	241.96	250.49	258.88	267.12	275.23	283.2	
180	234.4	243.01	251.47	259.79	267.97	276.01	283.92	
190	235.5	244.06	252.46	260.71	268.82	276.8	284.64	
200	236.6	245.12	253.45	261.63	269.67	277.59	285.37	
210	237.8	246.18	254.45	262.5	270.54	278.39	286.11	
220	238.9	247.26	255.45	263.49	271.4	279.19	286.85	
230	240.1	248.33	256.46	264.43	272.28	280	287.59	
240	241.2	249.41	257.46	265.37	273.16	280.82	288.35	
250	242.4	250.49	258.48	266.31	274.04	281.63	289.11	
260	243.5	251.58	259.49	267.27	274.92	282.46	289.86	
270	244.7	252.66	260.52	268.23	275.82	283.29	290.64	
280	245.8	253.76	261.54	269.18	276.71	284.12	291.4	
290	247	254.86	262.57	270.15	277.61	284.95	292.18	
300	248.2	255.96	263.6	271.11	278.51	285.79	292.95	

Copyright VCS Quality Services Private Limited – All rights reserved

Digitally signed by RACHNA SHUKLA
Date: 2025.03.13 12:53:14 IST

FIGURE – 1

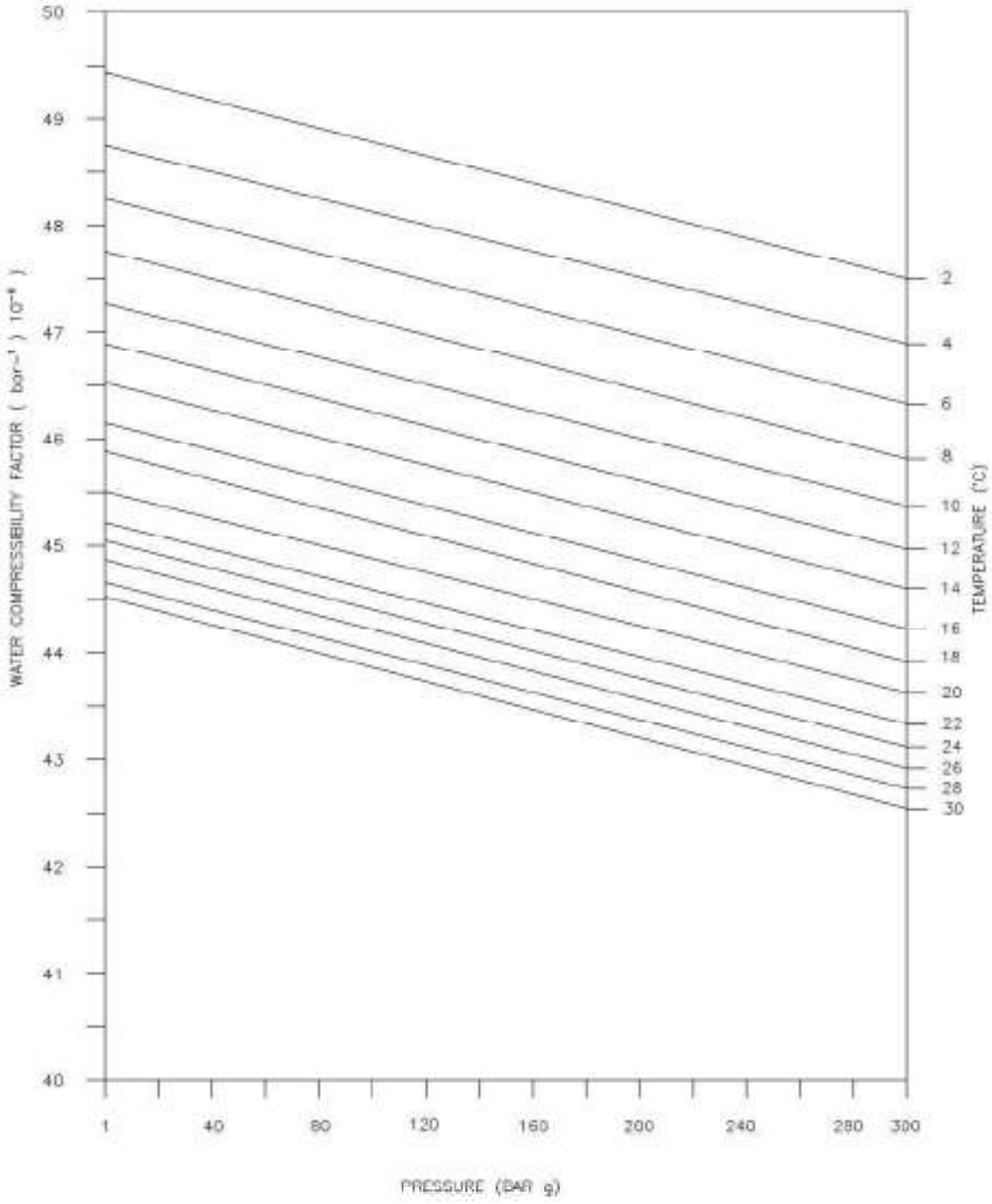

FIG. 1- WATER COMPRESSIBILITY FACTOR v/s PRESSURE AND TEMPERATURE

Copyright VCS Quality Services Private Limited – All rights reserved

Digitally signed by RACHNA SHUKLA
Date: 2025.03.13 12:53:14 IST

VCS QUALITY SERVICES PVT. LTD.

STANDARD SPECIFICATION
FOR
PIPELINE MARKERS

VCS – SS – PP - 2015

Rev. No	Date	Prepared By	Checked By	Approved By	Authorized By
02	29.04.2022	RP	MC	HK	GW
01	28.11.2019	MB	AK	AD	SK
00	12.10.2017	CM	SM	AD	SK

UNCONTROLLED COPY	:	If printed
CONTROLLED COPY	:	If in soft and signed

Copyright VCS Quality Services Private Limited – All rights reserved

Digitally signed by RACHNA SHUKLA
Date: 2025.03.13 12:53:14 IST

REVISION RECORD						
Rev.	**Revision Date**	**Prepared by**	**Checked by**	**Approved by**	**Authorized by**	**Revision Description**
00	12.10.2017					Revised as Marked
		CM	SM	AD	SK	
01	28.11.2019					Revised as Marked
		MB	MC	AD	SK	
02	29.04.2022					VCS QMS Integration
		RP	MC	HK	GW	

Copyright VCS Quality Services Private Limited – All rights reserved

Digitally signed by RACHNA SHUKLA
Date: 2025.03.13 12:53:14 IST

ABBREVIATIONS:

API	American Petroleum Institute.
ASME	American Society of Mechanical Engineers.

Copyright VCS Quality Services Private Limited – All rights reserved

Digitally signed by RACHNA SHUKLA
Date: 2025.03.13 12:53:14 IST

CONTENTS

1.0 SCOPE 5
2.0 REFERENCE 5
3.0 GENERAL 5
4.0 KILOMETER MARKERS 5
5.0 AERIAL MARKER 6
6.0 PIPELINE WARNING SIGN 6
7.0 ROU BOUNDRY MARKER 6
8.0 DIRECTION MARKERS 7
9.0 NAVIGABLE WATERWAY PIPELINE CROSSING WARNING SIGN 7
10.0 SPECIAL MARKERS 7

Copyright VCS Quality Services Private Limited – All rights reserved

Digitally signed by RACHNA SHUKLA
Date: 2025.03.13 12:53:14 IST

1.0 SCOPE

1.1 This specification covers the minimum requirements of supply, fabrication and erection of pipeline markers to be installed by contractor at various locations along the proposed pipeline route of onshore pipelines carrying gas or liquid. The markers and signs may contain information to be used by the public when reporting emergencies and seeking assistance in determining precise location of a buried pipeline.

2.0 REFERENCE

The latest edition (edition in force at the time of issue of enquiry) of following additional references are included in this specification.

AMERICAN SOCIETY OF MECHANICAL ENGINEERS (ASME)

B31.4	:	Pipeline Transportation Systems for Liquids and Slurries.
B 31.8	:	Gas Transmission and Distribution Piping Systems.

AMERICAN PETROLEUM INSTITUTE (API)

RP 1109	:	Recommended practice for Marking Liquid petroleum pipeline facilities.

3.0 GENERAL

3.1 Contractor shall supply, fabricate, install and paint the Pipeline Markers along the pipeline route. The location of markers as indicated in the approved drawings shall be treated for guidance purpose only and the exact location of the markers shall be as per requirement stipulated in this specification and as directed by the company. All the markers shall be painted in accordance with the requirement of relevant standard specification for shop and field painting.

3.2 The pipeline markers shall be fabricated and installed in accordance with VCS standard drawings included herein. Before start of fabrication of markers, the Contractor shall prepare and submit for company's approval, the detailed scheme for the marker plates as applicable for the project.

3.3 The pipeline markers shall be installed, as far as possible, to minimize hindrance to the regular use of land traffic.

3.4 The line marker's message should be presented on strong, durable material, finished to resist the effects of exposure and vandalism.

4.0 KILOMETER MARKERS

Kilometer Markers shall be installed along the pipeline at every one-kilometer interval. Markers shall indicate cumulative chainage in kilometers from the reference station, in the direction of flow. A kilometer marker is not required in the following locations:

Copyright VCS Quality Services Private Limited – All rights reserved

Digitally signed by RACHNA SHUKLA
Date: 2025.03.13 12:53:14 IST

1. If the relative length between the location and any pipeline warning sign is less than 200 meters.
2. Every five Kilometers where Areal Markers are installed.
   For Kilometer Marker details refer VCS Standard Drawing

5.0 AERIAL MARKER

Aerial Marker shall in general be installed along the pipeline at every five (5) kilometers intervals and at places specified by the company. For Aerial Marker details refer VCS Standard Drawing.

6.0 PIPELINE WARNING SIGN

The pipeline crossing & pipeline facilities such as stations, terminals, valves, metering or pipeline junction manifolds should be marked with appropriate signs. Pipeline Warning Signs shall in general be installed at the following locations. Caution should be used when installing a marker anywhere other than directly over or in proximity to the buried pipeline to avoid any possible misinterpretation as to where the actual pipeline is located.

National and State Highway Crossings (at both ends)	2 Nos. min.
Other Road Crossings	1 No. min.
Railway Crossings (at both ends)	2 Nos. min.
Minor Water Crossings(less than 15 meter width)	1 No. min.
Minor Water Crossings (above 15 meter width)	2 Nos. min.
Major Water Crossings (at both ends)	2 Nos. min.
Valve Station / TOP / HOV's	1 No. min.
Any other location as shown in the approved drawings and as directed by the company.	

Pipeline warning sign shall indicate the pressure & pipeline facility and display the name of the Company with an emergency telephone number. For Pipeline Warning Sign details refer VCS Standard Drawing..

7.0 ROU BOUNDRY MARKER

Right of Use Boundary Markers shall be fabricated as per the drawings and shall be installed at every 250 meters interval along the entire pipeline route. These shall be installed on either side of the pipeline alignment to define the ROU boundary limits. These shall also be installed at pipeline turning points to maintain the continuity of the ROU limits. Due care shall be taken while installing ROU boundary marker. Boundary marker shall be preferably installed at the boundary of farmer plot as applicable, so that it does not get displaced during course of time. For ROU Marker details refer VCS Standard Drawing..

Copyright VCS Quality Services Private Limited – All rights reserved

Digitally signed by RACHNA SHUKLA
Date: 2025.03.13 12:53:14 IST

8.0 DIRECTION MARKERS

Direction Markers shall be installed to identify the significant Turning Points of the pipeline during aerial traverse, where there is change of pipeline direction. One direction marker shall be installed at such Turning Point; two more direction markers shall be installed along the pipeline alignment, one on either side of the Turning Point at 200 m from the Turning Point. For Direction Marker fabrication details refer VCS Standard Drawing.

9.0 NAVIGABLE WATERWAY PIPELINE CROSSING WARNING SIGN

The Navigable Waterway Pipeline Crossing Warning Sign shall be fabricated and installed one on each bank of navigable water courses at the pipeline crossing location, in lieu of the Pipeline Warning Sign should contain the words "Do not Anchor or Dredge". For Warning Sign fabrication details refer VCS Standard Drawing..

10.0 SPECIAL MARKERS

As directed by Company, Special Markers shall be installed at location where following changes take place:

a) Change in pipeline diameter and wall thickness.
b) Change in type of pipe.
c) Change in class locations for pipelines (in case of gas pipelines)

The above data may be provided on other types of marker (except ROU boundary marker), if the relative distance between the two does not exceed 100 m.

Copyright VCS Quality Services Private Limited – All rights reserved

Digitally signed by RACHNA SHUKLA
Date: 2025.03.13 12:53:14 IST

VCS QUALITY SERVICES PVT. LTD.

STANDARD SPECIFICATION
FOR
CASING INSULATORS AND END SEALS

VCS – SS – PP - 2016

Rev. No	Date	Prepared By	Checked By	Approved By	Authorized By
03	29.04.2022	RP	MC	HK	GW
02	03.01.2022	SR	MC	HK	HK

UNCONTROLLED COPY	:	If printed
CONTROLLED COPY	:	If in soft and signed

Copyright VCS Quality Services Private Limited – All rights reserved

Digitally signed by RACHNA SHUKLA
Date: 2025.03.13 12:53:14 IST

REVISION RECORD						
Rev.	**Revision Date**	**Prepared by**	**Checked by**	**Approved by**	**Authorized by**	**Revision Description**
00	23.06.2017					Document formatting, Cover Page, Doc numbering updated from SS-PL-019 to VPC-SS-PL-0019 keeping revision number same.
		AS	SM	AD	SK	
01	28.01.2020					Document numbering updated from VPC-SS-PL-0019 to VPC-SS-PP-2016
		MB	MC	AD	SK	
02	03.01.2022					Revised as Marked
		SR	MC	HK	HK	
03	29.04.2022					VCS QMS Integration
		RP	MC	HK	GW	

Copyright VCS Quality Services Private Limited – All rights reserved

Digitally signed by RACHNA SHUKLA
Date: 2025.03.13 12:53:14 IST

ABBREVIATIONS:

ASME	American Society of Mechanical Engineers
ASTM	American Society of Testing of Materials
API	American Petroleum Institute

Copyright VCS Quality Services Private Limited – All rights reserved

Digitally signed by RACHNA SHUKLA
Date: 2025.03.13 12:53:14 IST

CONTENTS

1.0 SCOPE 5
2.0 REFERENCE DOCUMENTS 5
3.0 FUNCTIONAL REQUIREMENTS 6
4.0 DESIGN AND MANUFACTURE 6
5.0 MATERIAL PROPERTIES 8
6.0 INSPECTIONS AND TESTING 8
7.0 INSTALLATION 9

Copyright VCS Quality Services Private Limited – All rights reserved

Digitally signed by RACHNA SHUKLA
Date: 2025.03.13 12:53:14 IST

1.0 SCOPE

This specification covers the minimum requirements of design, material, manufacture and supply of casing insulators and end seals intended to be used for cased pipeline crossings forming part of buried onshore pipeline.

This specification shall be read in conjunction with the condition of all specifications and documents include in the contract between company and contractor.

2.0 REFERENCE DOCUMENTS

The design, materials, fabrication, inspection, testing and supply of casing insulators and end seals shall comply with the latest edition of the following codes and standards.

AMERICAN SOCIETY OF MECHANICAL ENGINEERS (ASME)

B31.4 : Pipeline Transportation System for Liquids and Slurries

B 31.8 : Gas Transmission and Distribution Piping Systems.

AMERICAN PETROLEUM INSTITUTE (API)

1102 : Steel Pipeline Crossing Railroads and Highways

PNGRB REGULATIONS:

G.S.R 808(E) T4S : Regulations for Natural Gas Pipelines

G.S.R. Infra/ T4S/ P&PPL : Regulations for Petroleum and Petroleum products pipelines

G.S.R. 612(E) T4S : Regulations for CGD Network

COMPANY STANDARD SPECIFICATIONS

Following Company specifications shall form integral part of this specification and shall be complied with when applicable to the works covered in the contract.

VPC-SS-PP-2001: Standard Specification for Pipeline Construction (Onshore)

VPC-SS-PP-2002: Specification for Construction of Pipelines Crossing Roads, Railroad and Minor Water Crossing

In case of conflict between various requirements of this specification and reference standards and regulations mentioned above, more stringent requirement shall apply unless otherwise agreed by Purchaser.

Copyright VCS Quality Services Private Limited – All rights reserved

Digitally signed by RACHNA SHUKLA
Date: 2025.03.13 12:53:14 IST

3.0 FUNCTIONAL REQUIREMENTS

3.1 CASING INSULATORS

Pipeline insulators shall be capable to support the carrier pipe inside the casing pipe and shall electrically isolate the carrier pipe from the casing pipe at the cased crossings.

The casing insulators shall be made of injection molded high density polyethylene or other equivalent or superior material and shall meet the following properties:

- Resist mechanical damage while being pulled into the casing.
- Have high compressive strength in order to ensure a permanent support to the carrier pipe.
- Have high electrical insulating value and low water absorption, thus preventing leakage and maintain-electrical isolation between carrier and casing pipes.
- Resist cold flow and do not soften at design temperature.
- Resist corrosion.
- Have low friction, to offer less resistance to carrier pipe movement.

PROPERTIES OF CASING INSULATORS

The material shall meet the following specifications:

Property	Value	ASTM Test Method
Dielectric strength	450-500 Volts/Mil	D-149
Compressive strength	3200 psi	D-695
Tensile strength	3100-5000 psi	D-638, D-651
Impact strength	4.0 ft.1b./inch of notch	D-256
Water Absorption	0.01%	D-570

3.2 CASING END SEALS

Casing end seals are intended to be used for sealing the annular space between casing pipe and carrier pipe at casing ends so as to prevent ingress of moisture and water.

The casing end seals shall be made of heat shrink high density radiation cross linked polyethylene with an adhesive having a melt point suitable for the pipeline service temperature and ambient temperature likely to be encountered during construction. End seals material shall be resistant to heat, cold, vibration, impact, abrasion, corrosive fluids, disbandment, organic and bio-deterioration. Manufacturer shall confirm compatibility of end seals with carrier pipe coating.

4.0 DESIGN AND MANUFACTURE

4.1 CASING INSULATOR

The arrangement of insulator shall be generally in accordance with Fig. 1.0. It shall be made in segments duly held together with cadmium plated bolts and nuts, to be supplied

Copyright VCS Quality Services Private Limited – All rights reserved

Digitally signed by RACHNA SHUKLA
Date: 2025.03.13 12:53:14 IST

with casing insulators.

The number of segments shall be two for pipe diameters up to DN 300 mm (12"). For larger diameter, the number of segments may be more than two, but their number shall be kept minimum.

As an alternate design in accordance with the casing insulator element shall be a flexible section containing a toothed male butt strap at one end and an appropriately toothed female slot on the other end. The same shall be wrapped over the outer surface of the carrier pipe and locked positively. The insulator rings should be fastened onto the carrier pipe with the appropriate tool to be provided by the casing insulator manufacturer. No metallic parts or attachments should be considered in the casing insulator element assembly. The design of casing insulator should allow for onsite adjustments for any variances within the allowable O.D. range of pipeline and should grip the pipe firmly without any chances of horizontal movement or breakage of the insulator rings during installation.

The skid height shall be such that it is slightly less than the value obtained by following formula:

$$\frac{\text{Casing Internal Dia - Carrier Outer Dia}}{2}$$

Manufacturer shall obtain prior approval from OWNER on casing insulators drawings/design.

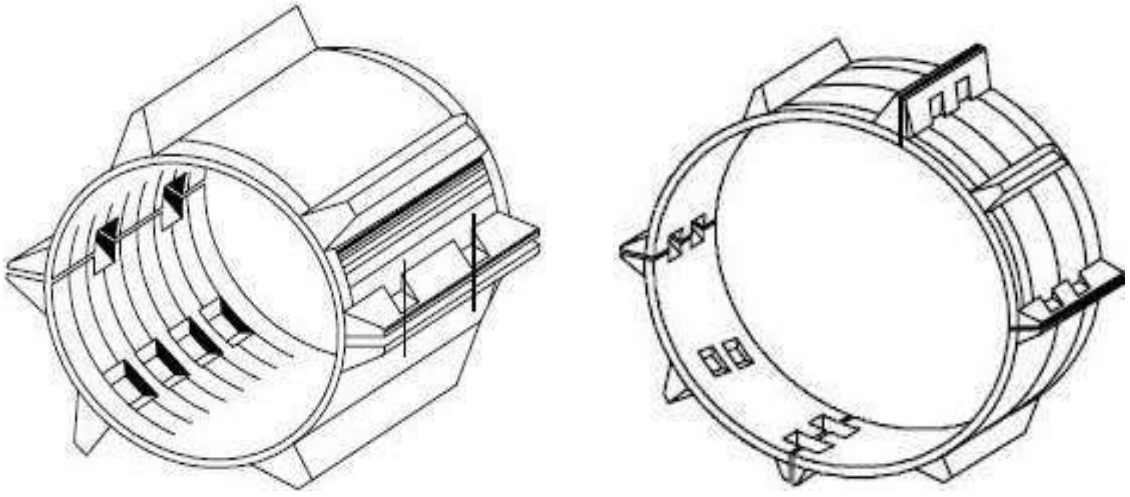

TWO PIECE CONSTRUCTION FOUR PIECE CONSTRUCTION

Fig 1.0 TYPICAL DETAILS OF CASING INSULATORS

Copyright VCS Quality Services Private Limited – All rights reserved

Digitally signed by RACHNA SHUKLA
Date: 2025.03.13 12:53:14 IST

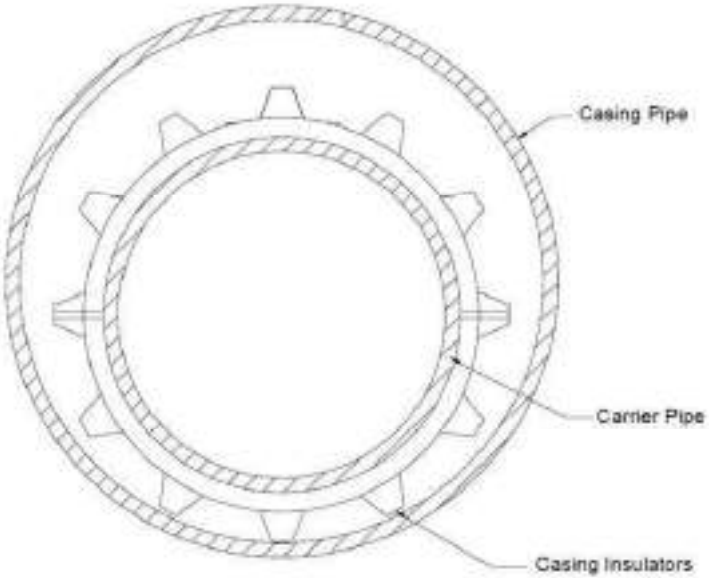

Fig 2.0 TYPICAL SKETCH OF CASING INSULATOR AND CASING PIPE

4.2 CASING END SEALS

The seals shall be suitable for the casing and carrier pipe diameters as applicable for each case. The casing end seal shall be flexible to cater for the expansion and contraction of carrier and casing pipes and shall be able to tolerate both angular and concentric misalignment of casing pipe without loss of sealing efficiency.

When HDPE ducts for OFC are also to be installed in the same casing pipe, the contractor shall install casing end seal in such a manner as to completely seal off the void between carrier pipe and HDPE ducts for OFC. Care shall be taken during installation of casing end seals so that after installation of casing end seals, neither HDPE ducts nor casing end seals are distorted or damaged.

The design of the casing end seals shall permit easy installation of the seal to the cased pipeline crossing.

It shall provide moisture proof seals when installed for the entire anticipated life of the burned pipeline.

Manufacturer shall obtain prior approval from OWNER on casing end seals design/drawings.

5.0 MATERIAL PROPERTIES OF CASING END SEALS

Casing end seals shall meet following minimum property requirements:

a. BACKING (SLEEVE AND CLOSURE PATCH)

Property	Minimum Value	ASTM Test Method
Tensile strength	2200 psi	D 638

Copyright VCS Quality Services Private Limited – All rights reserved

Digitally signed by RACHNA SHUKLA
Date: 2025.03.13 12:53:14 IST

Ultimate Elongation	400 %	D 638
Heat Shock	No Visual Cracks, Flow or Drips at 250°C, 4 hours	D 2671

b. ADHESIVE

Property	**Minimum Value**	**ASTM Test Method**
Ring and Ball Softening Point	90°C	E 28
Lap Shear	60°C - 25 psi 23°C - 250 psi (2 inch/min.)	D 1002

c. SYSTEM (AS APPLIED)

Property	**Minimum Value**	**ASTM Test Method**
Peel strength (To casing and carrier pipe and closure patch)	5 pli (10 inch/min.)	D 1000

6.0 INSPECTION AND TESTING

Manufacturer/contractor shall furnish material test certificates of the components used in the assembly of casing insulators and end seal as per the requirements of clause 4.0 of this specification.

The manufacturer/contractor shall replace, at no extra cost, any material not conforming to the material and performance requirements of this specification.

Manufacturer/contractor shall submit detailed specification of the materials used in the assemblies, along with instructions for handling, use and installation of the material for OWNER approval prior to procurement.

7.0 INSTALLATION

Casing insulators shall be installed on carrier pipe at spacing as recommended by manufacturer but in no case greater than. At both ends of cased crossing a set of two insulators shall be installed with outermost insulator at a maximum distance of mm from end. Figure 3.0 shows arrangement of casing insulators inside the casing pipe. All other requirements of installation shall be as per standard.

Copyright VCS Quality Services Private Limited – All rights reserved

Digitally signed by RACHNA SHUKLA
Date: 2025.03.13 12:53:14 IST

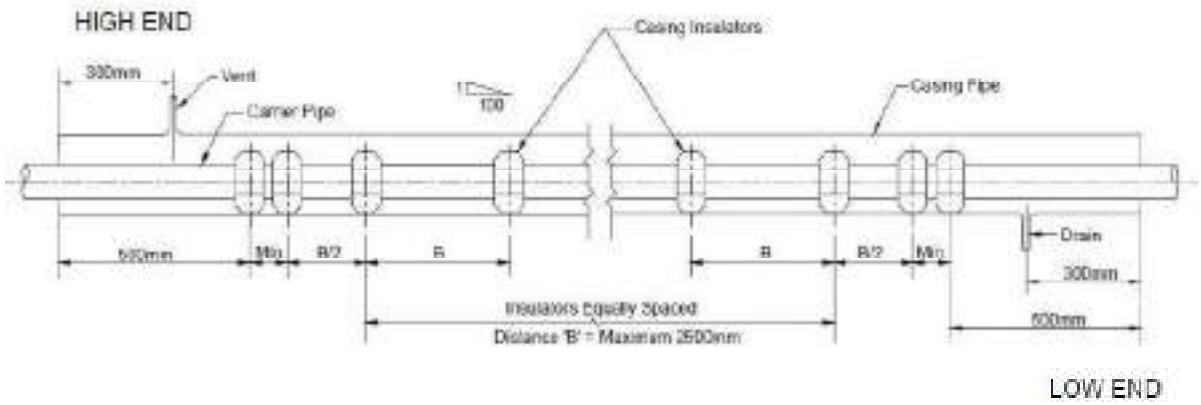

Fig 3.0 ARRANGEMENT OF CASING INSULATORS ON CARRIER PIPE

Copyright VCS Quality Services Private Limited – All rights reserved

Digitally signed by RACHNA SHUKLA
Date: 2025.03.13 12:53:14 IST

ENERGISING QUALITY

VCS QUALITY SERVICES PVT. LTD.

STANDARD SPECIFICATION
FOR
WELDING OF ONSHORE HYDROCARBON PIPELINE

VCS-SS-PP-2019

Rev. No	Date	Prepared By	Checked By	Approved By	Authorized By
04	29.04.2022	RP	MC	HK	GW
03	04.01.2022	SR	MC	HK	HK

UNCONTROLLED COPY	:	If printed
CONTROLLED COPY	:	If in soft and signed

Copyright VCS Quality Services Private Limited – All rights reserved

Digitally signed by RACHNA SHUKLA
Date: 2025.03.13 12:53:14 IST

REVISION RECORD

Rev.	Revision Date	Prepared by	Checked by	Approved by	Authorized by	Revision Description
00	27.08.2018					Issued as Standard Specification.
		PK	MD	AD	SK	
01	19.09.2019					Re-issued as Standard Specification
		SS	MC	AD	SK	
02	28.01.2020					Document numbering updated from VPC-SS-PL-0045 to VPC-SS-PP-2019.
		MB	MC	AD	SK	
03	04.01.2022					Revised as marked
		SR	MC	HK	HK	
04						VCS QMS Integration
	29.04.2022	RP	MC	HK	GW	

Copyright VCS Quality Services Private Limited – All rights reserved

Digitally signed by RACHNA SHUKLA
Date: 2025.03.13 12:53:14 IST

ABBREVIATIONS:

ANSI	American National Standards Institute
API	American Petroleum Institute
ASME	American Society of Mechanical Engineers
BS	British Standard
CRT	Cathode Ray Tube
CTOD	Crack Tip Opening Displacement
GMAW	Gas Metal Arc Welding
GTAW	Gas Tungsten Arc Welding
HAZ	Heat Affected Zone
HV	Vickers Hardness
IIW	International Institute of Welding
IQI	Image Quality Indicator
ISO	International Organization for Standardization
MPI	Magnetic Particle Inspection
PQR	Procedure Qualification Record
SMAW	Shielded Metal Arc Welding
UT	Ultrasonic Testing
UTS	Ultimate Tensile Strength
WPS	Welding Procedure Specification

Copyright VCS Quality Services Private Limited – All rights reserved

Digitally signed by RACHNA SHUKLA
Date: 2025.03.13 12:53:14 IST

CONTENTS

1.0 SCOPE 5

2.0 APPLICABLE CODE AND STANDARDS 5

3.0 BASE MATERIAL 4

4.0 WELDING CONSUMABLES 5

5.0 EQUIPMENT & ACCESSORIES 6

6.0 WELDING PROCESSES 6

7.0 BEVEL CLEANING / BEVEL INSPECTION 7

8.0 ALIGNMENT AND SPACING 7

9.0 WEATHER CONDITIONS 8

10.0 WELDING 9

11.0 HEAT TREATMENT 11

12.0 INSPECTION & TESTING 13

13.0 REPAIRS OF WELDS 16

ANNEXURE-1 : DESTRUCTIVE TESTING 18

ANNEXURE-2 : ULTRASONIC INSPECTION 23

ANNEXURE-3 : RADIOGRAPHY 26

EXHIBIT-A : ELECTRODE QUALIFICATION TEST RECORD 33

EXHIBIT -B : STRESS RELIEF HEAT TREATMENT PROCEDURE SPECIFICATION 36

EXHIBIT-C : WELDING PROCEDURE QUALIFICATION TEST RECORD 37

EXHIBIT-D : WELDER QUALIFICATION TEST RECORD 40

EXHIBIT-E : WELDER'S IDENTIFICATION CARD 41

EXHIBIT-F : RADIOGRAPHIC PROCEDURE FOR PIPE WELDING 42

Copyright VCS Quality Services Private Limited – All rights reserved

Digitally signed by RACHNA SHUKLA
Date: 2025.03.13 12:53:14 IST

1.0 SCOPE

This specification covers the welding of carbon and low-alloy steel pipeline used in the transmission of hydrocarbons, covers welding of distribution systems. This specification applies to new construction of pipeline projects. The welding may be done by a shielded metal arc welding, submerged arc welding, gas tungsten arc welding, gas metal arc welding, flux cored arc welding, plasma arc welding or oxyacetylene welding process or by a combination of these processes using a manual, semiautomatic or mechanized welding technique or a combination of these techniques. The welds may be produced by position or roll welding or by a combination position and roll welding.

This specification also covers the procedures for radiographic, magnetic particle, liquid penetrant and ultrasonic testing as well as the acceptance standards for destructive testing in Procedure Qualification and Non-Destructive testing methods viz. Radiographic, Magnetic Particle, Liquid Penetrant, Ultrasonic and visual.

It is intended that all work performed in accordance with this specification meets or exceeds the requirements of this specification

Any approval granted by the COMPANY shall not relieve the CONTRACTOR of his Responsibilities and guarantees.

2.0 APPLICABLE CODE AND STANDARDS

All welding work, equipment for welding, heat treatment, other auxiliary functions and the welding personnel shall meet the requirements of the latest editions (editions in force at the time of floating the enquiry) of the codes, standards and specifications listed below:

a) Code for Gas Transmission and Distribution Piping Systems, ASME B 31.8

b) Standard for welding of Pipelines and Related Facilities, API 1104

c) Specification for welding Electrodes and Filler Materials ASME Sec. II C

d) Non-Destructive examination, ASME Sec. V

3.0 BASE MATERIAL

In general carbon steel is used in this specification. The details of material specifications are given in the welding Specification Chart attached along with

Copyright VCS Quality Services Private Limited – All rights reserved

Digitally signed by RACHNA SHUKLA
Date: 2025.03.13 12:53:14 IST

other project data sheets. The CONTRACTOR will arrange and maintain the record of test certificates of all the materials for the reference of the welding engineer.

4.0 WELDING CONSUMABLES

a) The CONTRACTOR shall provide at his own expense all the welding consumables necessary for the execution of the job such as electrodes, oxygen, acetylene etc. and These shall bear the approval of the COMPANY.

b) The welding electrodes / filler wires supplied by the CONTRACTOR shall conform to the class specified in the welding specification chart attached along with other project data sheets. The materials shall be of the make approved by the COMPANY.

c) The electrode shall be suitable for the welding process recommended and the base metal used. Physical properties of the welds produced by an electrode recommended for the welding of a particular base metal shall not be lower than the minimum values specified for the base metal unless otherwise specified in the Welding Specification Chart and shall correspond to the physical properties of the class of electrode adopted. The choice of electrode shall be made after conducting the required tests on the electrodes as per relevant standards, and shall be the sole prerogative of the COMPANY.

d) The CONTRACTOR shall submit batch test certificates from each electrode manufacturers giving details of physical and chemical tests carried out by them for each batch of electrodes to be used.

e) Electrode Qualification test records shall be submitted as per the Exhibit-A (attached) in respect of the electrodes tested by the CONTRACTOR for obtaining the approval of the COMPANY.

f) All electrodes shall be purchased in sealed containers and stored properly to prevent deterioration. The electrodes removed from the containers (except cellulosic coated electrodes) shall be kept in the holding ovens, at the temperature recommended by the electrode manufacturer. Ovens shall be used for the low hydrogen electrodes only. Out-of-the oven time of electrodes before they are consumed shall not exceed the limits recommended by the electrode manufacturer. The electrodes shall be handled with care to avoid any damage to the flux covering. Different grades of electrodes shall be stored separately. Cellulosic electrodes used shall however be used as per the specific recommendations of manufacturer.

Copyright VCS Quality Services Private Limited – All rights reserved

Digitally signed by RACHNA SHUKLA
Date: 2025.03.13 12:53:14 IST

g) The electrodes used shall be free from rust, oil, grease, earth and other foreign matter, which affect the quality of welding.

h) **Shielding Gas**: The composition and the purity of shielding gas when required by the welding

Processes other than shielded metal arc welding, when permitted by the COMPANY shall bear the approval of the COMPANY. Where appropriate, gases or gas mixture of the following quality shall be used.

I. Argon gas complying with BS 4365.

2. Carbon dioxide gas complying with type 1 specified in BS 4105

3. Gas mixtures that have been proved to be satisfactory as a result of procedure approval tests.

When a gas mixture is used, which has specified additions, e.g. 2% O2, 5% CO2 the variation of such addition shall not exceed ±10% of that stated. Moisture content shall correspond to a dew point of -30'C or lower.

5.0 EQUIPMENT & ACCESSORIES

The CONTRACTOR shall have sufficient number of welding and cutting equipment, Auxiliaries and accessories of sufficient capacities to meet the target schedules.

5.1 All the equipment for performing the heat treatment, including transformers, thermocouples, pyro-meters, automatic temperature recorders with suitable calibration arrangements, etc. shall be provided by the CONTRACTOR, at his own expense and these shall bear the approval of the COMPANY. Adequate means of measuring current and voltage shall be available.

5.2 Redoing of any work necessitated by faulty equipment or operation used by the CONTRACTOR, will be done at his own expense.

6.0 WELDING PROCESSES

6.1 Welding of various materials under this specification shall be carried out using Shielded Metal Arc Welding process (SMAW) with the approval of the COMPANY.

6.2 The welding processes to be employed are given in the welding specification chart attached along with other project data sheets. Any deviation desired by the CONTRACTOR shall be obtained through the express consent of the COMPANY.

6.3 Automatic process shall be employed only with the express approval of the COMPANY. The welding procedure adopted and the consumables used shall be specifically approved.

6.4 A combination of different welding processes or a combination of electrodes of different classes / makes could be employed for a particular joint only after duly

Copyright VCS Quality Services Private Limited – All rights reserved

Digitally signed by RACHNA SHUKLA
Date: 2025.03.13 12:53:14 IST

qualifying the welding procedures to be adopted and obtaining the approval of the COMPANY.

7.0 BEVEL CLEANING / BEVEL INSPECTION

The Line Pipe supplied by COMPANY shall have bevel ends as specified in the applicable specification for the Line Pipe attached with the Bid Package. Any modification thereto, if required by the CONTRACTOR due to his special welding technique, shall be carried out by the CONTRACTOR at his own cost. Before welding, all the rust and the foreign matter shall be removed from the beveled ends by power operated tools. This shall be affected inside and outside and for a minimum distance of 25 mm from the edge of the weld bevel. The bevels shall be thoroughly inspected at this stage. If any of the ends of the pipe joints are damaged to the extent that, in the opinion of the COMPANY, satisfactory weld spacing cannot be obtained and local repair by grinding cannot be successfully done, the damaged ends shall be cut and beveled to the satisfaction of the COMPANY, with an approved beveling machine. Manual cutting and weld repairs of bevels is not allowed. Should laminations, split ends or inherent manufacturing defects in the pipe be discovered, the lengths of pipe containing such defects shall be removed from the line to the satisfaction of COMPANY. On pipes, which have been cut back, a zone extending 25 mm back from the new field bevel, shall be ultrasonically tested to the requirement of the line pipe specification to ensure freedom from laminations. The new bevel shall be 100% visual and 100% dye penetrant/MPI tested. A report shall be written for all the testing and records kept.

8.0 ALIGNMENT AND SPACING

Immediately prior to line-up CONTRACTOR shall inspect the pipe ends inside and outside for damage, dents, laminations etc. Pipe for welding shall be set up, correctly spaced, allowing for the temperature changes during welding. In correct alignment shall in no circumstances be sprung into position. Temporary attachments of any kind shall not be welded to the pipe. Welds joining the sections of the pipeline, valve installation or similar welds classified as tie in welds shall be made in the trench. Otherwise, the alignment and welding shall be made alongside the ditch with the pipe supported on skids and pack pads or other suitable means approved by COMPANY, at least 500 mm above the ground unless approved by the COMPANY in specific cases.

Copyright VCS Quality Services Private Limited – All rights reserved

Digitally signed by RACHNA SHUKLA
Date: 2025.03.13 12:53:14 IST

Seam orientation of welded pipe shall be selected to ensure that at the circumferential welds, the longitudinal welds shall be staggered in the top 90° of the pipelines, or 250 mm whichever is the lesser. A longitudinal joint shall pass an appurtenance of a structural element at a minimum distance of 50 mm. Should a section of the line containing uncompleted welds fall from the skids, the CONTRACTOR shall immediately inform the COMPANY.

Every effort shall be made to reduce misalignment by the use of the clamp and rotation of the pipes to the best fit. For pipe of same nominal wall thickness the offset shall not exceed 1.6 mm. The offset may be checked from outside using dial gauges. Any branch connection sleeve, etc. shall be at least 150 mm from any other weld. The welds for fittings shall be so located that the toe of the weld shall not come within 50 mm of any other weld. Cold dressing is permissible only in cases of slight misalignment and may only be carried out with a bronze headed hammer. Hot dressing shall not be permitted. When welding pipes of different wall thickness (as directed by COMPANY) a special transition piece shall be used. This shall have a minimum of 1:4 taper. The welds shall be subject to both ultrasonic and radiographic inspection.

The root gap shall be accurately checked and shall conform to the qualified welding procedure. The use of internal Line-up Clamps is mandatory for pipe diameters 10" and above. However, in some cases (tie-in welds, flanges, fittings, diameter of pipe 10" etc.) where it is impossible to use internal clamps, an external line-up clamp may be used.

The internal line-up clamp shall not be released before the entire first pass has been completed.
When an external line-up clamp is used, all the spaces between the bars or at least 60% of the first pass shall be welded before the clamp is released and the pipe remaining adequately supported on each side of the joint.

Segments thus welded shall be equally spaced around the circumference of the pipe. Slag, etc. shall be cleaned off and the ends of the segments shall be prepared by grinding, so as to ensure continuity of the weld bead.

9.0 WEATHER CONDITIONS

The parts being welded and the welding personnel shall be adequately protected from rain and strong winds. In the absence of such a protection no welding shall be

Copyright VCS Quality Services Private Limited – All rights reserved

Digitally signed by RACHNA SHUKLA
Date: 2025.03.13 12:53:14 IST

carried out. The completed welds shall be suitably protected in case of bad weather conditions.

10.0 WELDING

10.1 Root Pass

a) The root pass shall be made with the electrodes/filler wires recommended in the welding specification chart attached along with the other project data sheets. The size of the electrodes used shall be as per the approved welding procedure.

b) Position or roll welding may be permitted. The vertical up method of welding shall be used for the root pass of the tie-ins, special crossings, fittings and special parts, fillet welds, repairs and when an external line up clamp is used. The downhill welding may be used for the root run welding of tie-ins and special crossings when (a) the edges are machined or have equivalent preparation (b) line up clamps are used and the fit up is geometrically and mechanically similar to one of the ordinary line welding without misalignment or unevenness.

c) The root pass of butt joints shall be executed properly so as to achieve full penetration with complete fusion of the root edges. Weld projection inside the pipe shall not exceed 3 mm wherever not specified by the applicable code.

d) Any deviations desired from the recommended welding technique and electrodes indicated in the welding specification chart shall be adopted only after obtaining express approval of the COMPANY.

e) Welding shall be continuous and uninterrupted during a pass.

f) On completion of each run, craters, welding irregularities, slag etc., shall be removed by grinding and chiseling.

g) While the welding is in progress care shall be taken to avoid any kind of movement of the components, shocks, vibration and stresses to prevent occurrence of weld cracks.

h) Fillet welds shall be made by shielded metal arc welding process irrespective of the thickness and class of piping. Electrode size shall not exceed 3.25 mm diameter for the socket joints. At least two passes shall be made on the socket weld joints.

i) Peening shall not be used.

10.2 Joint Completion

In case of manual welding, for sizes 12” and above, the first pass shall be carried out by a minimum of two welders, working simultaneously and so placed as to cause minimum distortion of the pipe.

Copyright VCS Quality Services Private Limited – All rights reserved

Digitally signed by RACHNA SHUKLA
Date: 2025.03.13 12:53:14 IST

The number of welders and the allowable welding sequences shall be as those laid down in the qualified welding procedure specification. Once the deposit of the first pass has been started, it must be completed as rapidly as possible, reducing interruptions to the minimum. The welding and wire speed shall be approximately same as that established in the qualified welding procedure specification.

The pipe shall always be adequately supported and must not be bumped or shaken during welding. The clamp shall be removed, as indicated in clause 8.0 above. Before starting the second pass, the first pass shall be cleaned and flattened with rotating grinders.

The interruption between completion of the first pass and starting the second pass shall be as stated in the procedure specification, normally not exceeding four minutes.

For crack prevention a top and bottom reinforcement of at least one electrode shall be applied before lowering the pipe on the skid.

The welding speed selected shall enable production of a bead which is sufficiently thick and which shows no under cutting.

The time lapse between the second and the third pass shall be as stated in the procedure specification, normally not exceeding five minutes. After completion of the third or following passes, welding operations may be suspended, so allowing the joint to cool down, provided that the thickness of the weld metal deposited is equal to at least 50% of the pipe thickness. Upon restarting, depending on the materials, wall thickness and welding process, a preheating of at least 100°C shall be applied. Subsequerit passes up to weld completion shall be protected to avoid rapid cooling, if meteorological conditions so dictate. Cleaning between the passes shall be done carefully so as to reduce the possibility of inclusions.

The electrode starting and finishing points shall be staggered from pass to pass. Arc-strikes outside the bevel on the pipe surface are not permitted. Arc-strike or arc-burn on the pipe surface outside the weld, which are caused accidentally by electrical arcs between the electrode, electrode holder, welding cable or welding cable round and the pipe shall be removed by grinding in accordance with a procedure approved by the COMPANY and the repair checked by ultrasonic, radiographic, magnetic particle or dye penetrant tests which the COMPANY feels

Copyright VCS Quality Services Private Limited – All rights reserved

Digitally signed by RACHNA SHUKLA
Date: 2025.03.13 12:53:14 IST

necessary. The pipe wall thickness after grinding shall not be less than the minimum thickness limit permitted for the pipe. Repair of arc strikes by welding is prohibited.

The completed weld shall be carefully brushed and cleaned and shall appear free from spatters, scales, etc.

These requirements apply not only to completed welds but also to the bare strip at least so wide as to allow full skid examination at both ends of the pipe to allow a good ultrasonic inspection when it is required.

11.0 HEAT TREATMENT

11.1 Preheating

a) Preheating requirements for the various materials shall be as per the welding Specification chart attached along with other project data sheets.

b) Preheating shall be performed using resistance or induction heating methods. Pre-heating for tie-in welds, repair welds or welds at point spreads may be done using a propane gas burner ring with prior approval from PMC/owner. The contractor may be asked to demonstrate the effectiveness of the arrangement.

c) Preheating shall extend uniformly to at least three times the thickness of the joint, but not less than 50 mm, on both sides of the weld.

d) Preheating temperature shall be maintained over the whole length of the joint during welding. Temperature indicating crayons or other temperature indicating devices shall be provided by the CONTRACTOR to check the temperature.

11.2 Post Weld Heat Treatment

a) Post weld heat treatment, wherever required for joints between pipes and fittings, pipe body and supports shall be carried out by the CONTRACTOR at his expense as per the relevant specifications, applicable standards and the instructions of the COMPANY.

b) The heat treatment of welded joints shall be carried out as per the requirements laid down in ASME B31.8 and other special requirements mentioned in welding
Specification chart.

c) The CONTRACTOR shall submit for the approval of the COMPANY, well before Carrying out actual heat treatments the details of the post weld heat treatment Procedure, as per Exhibit 'B' attached, that he proposes to adopt for each of the Materials/assembly/part involved.

d) Post weld heat treatment shall be done in a furnace or by using an electric resistance or induction heating equipment, as decided by the COMPANY.

Copyright VCS Quality Services Private Limited – All rights reserved

Digitally signed by RACHNA SHUKLA
Date: 2025.03.13 12:53:14 IST

e) While carrying out local post weld heat treatment, technique of application of heat must ensure uniform temperature attainment at all points of the portion being heat- treated. Care shall be taken to ensure that width of heated band over which specified post weld heat treatment temperature is attained is at least as that specified in the relevant applicable standards/codes.

f) The width of the heated band centered on the weld shall at least be equal to the width of weld plus 2" (50 mm). The temperature gradient shall be such that the length of the material on each side of the weld, at a temperature exceeding half the heat treatment temperature, is at least 2.5 rt where r is the bore radius and t is the pipe thickness at the weld.

g) Throughout the cycle of heat treatment, the portion outside the heat band shall be suitably wrapped under insulation so as to avoid any harmful temperature gradient at the exposed surface of pipe. For this purpose, temperature at the exposed surface of the pipe shall not be allowed to exceed 400°C.

h) The temperature attained by the portion under heat treatment shall be recorded by means of thermocouple pyrometers. Adequate number of thermocouples shall be attached to the pipe directly at equally spaced locations along the periphery of the pipe joint. The minimum number of thermocouples attached per joint shall be 2 up to 10" dia and 3 for 12" dia and above. However, the COMPANY can increase the required minimum number of thermocouples to be attached if found necessary.

i) Automatic temperature recorders, which have been suitably calibrated, shall be Employed. The calibration chart of each recorder shall be submitted to the COMPANY prior to starting the heat treatment operation and its approval shall be Obtained.

j) Immediately on completion of the heat treatment, the post weld heat treatment charts/records along with the hardness test results on the weld joints (whenever required as per the welding specification chart) shall be submitted to COMPANY for its approval.

k) Each joint shall bear an identification number, which shall be maintained in the piping sketch to be prepared by the CONTRACTOR. The joint identification number shall appear on the corresponding post weld heat treatment charts. The same identification numbers shall also be followed for identification of corresponding radiographic films. The chart containing the identification number and the piping sketch shall be submitted to the COMPANY in suitable folders.

l) Vickers hardness/Brinell hardness of the heat affected zone as well as of the weld metal, after heat treatment shall be measured using a suitable hardness tester and shall not exceed the maximum hardness specified in the welding

Copyright VCS Quality Services Private Limited – All rights reserved

Digitally signed by RACHNA SHUKLA
Date: 2025.03.13 12:53:14 IST

specification chart. The weld joint shall be subjected to reheat treatment, when hardness measured exceeds the specified limit, at the CONTRACTOR'S own expense.

m) The CONTRACTOR shall arrange for the hardness testing and shall maintain the Records of all the joints tested. These records shall be checked by the plant COMPANY'S inspector.

12.0 INSPECTION & TESTING

12.1 General

a) The COMPANY'S Inspector shall have free access to all the concerned areas, where the actual work is being performed. The CONTRACTOR shall also afford the COMPANY'S inspector all means and facilities necessary to carry out inspection.

b) The COMPANY is entitled to depute its own inspector to the shop or field where prefabrication and erection of pipelines are being done, with (but not limited to) the following objectives:

i) To check the conformance to relevant standards and suitability of various Welding equipment and the welding performance.

ii) To supervise the welding procedure qualification.

iii) To supervise the welders' performance qualification.

iv) To check whether shop/field welding being executed is in conformity with the relevant specifications and codes of practice followed in pipe construction.

c) CONTRACTOR shall intimate sufficiently in advance the commencement of the Qualification tests, welding works and acceptance tests, to enable the COMPANY'S inspector to be present to supervise them.

12.2 Welding Procedure Qualification

a) Welding procedure qualification shall be carried out in accordance with the relevant requirements of API 1104 latest edition (edition in force at the time of floating the enquiry) or other applicable codes and other job requirements by the CONTRACTOR at his expense. The CONTRACTOR shall submit the welding procedure specifications in format as per Exhibit-C (attached) immediately after the receipt of the order.

b) COMPANY'S inspector will review, check and approve the welding procedure submitted and shall release the procedure for procedure qualification tests. The. Procedure qualification test shall be carried out by the CONTRACTOR under field conditions at his own expense. A complete set of the test results in format as per Exhibit-C (attached) shall be submitted to the COMPANY'S Inspector for approval immediately after completing the procedure qualification test and at least 2 weeks before the commencement of actual work. Standard tests as

Copyright VCS Quality Services Private Limited – All rights reserved

Digitally signed by RACHNA SHUKLA
Date: 2025.03.13 12:53:14 IST

specified in the code shall be carried out in all cases. In addition to these tests, other tests like radiography, macro/micro examination, hardness tests, dye penetrant examination, Charpy v-notch etc. shall be carried out on the specimens. It shall be the responsibility of the CONTRACTOR to carry out all the tests required to the satisfaction of the COMP ANY'S Inspector. The destructive testing of welded joints shall be as per Annexure - 1.

12.3 Welder's Qualification

a) Welders shall be qualified in accordance with the API 1104 and other applicable specifications by the CONTRACTOR at his expense. The butt weld test pieces of the qualification test shall meet the radiographic test requirements specified in Clause 12.5 and Annexure-3 of this specification. The COMPANY'S inspector shall witness the test and certify the qualification of each welder separately. Only those welders who have been approved by the COMPANY'S inspector shall be employed for welding. CONTRACTOR shall submit the welder qualification test reports in the standard format as shown in Exhibit - D and obtain express approval, before commencement of the work. It shall be the responsibility of CONTRACTOR to carry out qualification tests of welders.

b) The welders shall always have in their possession the identification card as shown in Exhibit-E and shall produce it on demand by the COMPANY'S Inspector. It shall be the responsibility of the CONTRACTOR to issue the identity cards after the COMPANY has duly certified it.

c) No welder shall be permitted to work without the possession of identity card.

d) If a welder is found to perform a type of welding or in a position for which he is not qualified, he shall be debarred from doing any further work. All welds performed by an unqualified welder shall be cut and redone by a qualified welder at the expense of the CONTRACTOR.

12.4 Visual Inspection

COMP ANY shall carry out inspection of all welds as per the latest editions of the applicable codes and specifications. All finished welds shall be visually inspected for parallel and axial alignment of the work, excessive reinforcement, concavity, shrinkage, cracks, under-cuts, dimensions, surface porosity and other surface defects. Undercutting adjacent to the completed weld shall not exceed the limits specified in the applicable standard I code.

12.5 Non Destructive Examination

The non-destructive examination shall mainly consist of examination using x-ray radiography as detailed in Annexure 3.

Radiographic examination of one hundred percent (100%) girth welds will be required by the COMPANY. Welds shall meet the standards of acceptability as set forth in API 1104 and as well as the requirements laid in subsequent paragraphs.

The CONTRACTOR shall make all the arrangements for the radiographic examination of work covered by the specification at his expense.

Copyright VCS Quality Services Private Limited – All rights reserved

Digitally signed by RACHNA SHUKLA
Date: 2025.03.13 12:53:14 IST

The COMPANY will review all the radiographs of welds and inform the CONTRACTOR regarding unacceptable welds. The decision of the COMPANY shall be final and binding in this regard.

All the requirements mentioned in the specification shall be arranged and executed by the CONTRACTOR through his own resources. In addition, ultrasonic inspection is required in the following cases as per Annexure - 2 of this Specification.

a) When 20 mm or more are cut from the pipe end as supplied, the ends shall be ultrasonically inspected for an additional length of 20 mm to assure no laminations exist.

b) When in the opinion of COMPANY, ultrasonic inspection is required to confirm or clarify defects indicated by radiography.

c) When automatic procedure is used at least 10 cm on each weld shall be ultrasonically inspected at COMPANY's discretion.

d) UT on Golden Joints.

All fillet and groove welds other than those radiographed shall be subjected to dye penetrant! MP inspection. The non- destructive test system used for inspecting welds must by approved by the COMPANY.

12.5.1 Acceptance Criteria

Weld quality as judged on the basis of the acceptability criteria mentioned below:

i) Any weld, which as a result of radiographic and/or ultrasonic examination in the opinion of COMPANY exhibits imperfections greater than the limits, stated in API 1104 latest edition or as superseded in this article shall be considered defective and shall so be marked with an identification point marker.

ii) In addition to the API 1104 requirements, the welds containing cracks including crater cracks regardless of size or location are unacceptable.

Lack of fusion and lack of root penetration may be permitted only up to a maximum individual length of 25mm. Cumulative length of the defect shall not exceed 25 mm in any 300 mm length of weld. For welds less than 300 mm length, the aggregate length shall not exceed 8 percent of the weld length. Defects situated in line and separated by less than the length of the shortest defect shall be considered as one defect. However, no Lack of fusion or lack of root penetration is permitted at any intersections of welds.

Suitable records shall be maintained by the CONTRACTOR as desired by the COMPANY on the day-to-day work done on welding radiography, ultrasonic testing. The CONTRACTOR shall present the records to the COMPANY on day-to-day basis and whenever demanded, for approval.

12.6 Destructive Testing

The COMPANY has the authority to order the cutting of up to 0.1 % of the total number of welds completed for subjecting to destructive tests at no extra cost to

Copyright VCS Quality Services Private Limited – All rights reserved

Digitally signed by RACHNA SHUKLA
Date: 2025.03.13 12:53:14 IST

COMPANY. The destructive testing of weld joints shall be made as per Annexure - 1. In addition, welds already cut out for defects for any reason may also be subjected to destructive testing. The sampling and the re-execution of welds shall be carried out by the CONTRACTOR at his own expense. If the results are unsatisfactory, welding operations shall be suspended and may not be restarted until the causes have been identified and the CONTRACTOR has adopted measures, which guarantee acceptable results. If it is necessary in the COMPANY's opinion the procedure shall be requalified. The weld joint represented by unsatisfactory welds shall stand rejected unless investigation proves otherwise.

13.0 REPAIRS OF WELDS

13.1 With the prior permission of COMPANY welds, which do not comply with the standards of acceptability, shall be repaired or the joint cut out and re-welded. A separate welding procedure specification sheet shall be formulated and qualified by CONTRACTOR for repair welds simulating the proposed repair to be carried out. Separate procedures are required to be qualified for (a) through thickness repair (b) partial thickness repair (c) cover pass repair and (d) Double repair. Welders shall be qualified in advance for repairs. The root pass, for repairs opening the root, shall be replaced by the vertical uphill technique. The procedure shall be proven by satisfactory procedure test to API-l 104 including the special requirements of the specification, and shall also be subjected to metallographic examination, hardness surveys and Charpy tests to determine the effects of repair welding on the associated structure.

Root sealing or single pass repair deposit shall not be allowed. Internal root defects shall be ground thoroughly and welded with a minimum of two passes. However, while grinding for repairs, care shall be taken to ensure that no grinding marks are made on the pipe surface anywhere.

The repair shall be subjected, as a minimum requirement to the same testing and inspection requirements as the original weld. After the repair of the circumferential weld, re-radiography of the full joint shall be carried out. Any repaired area that is wide, irregular or rough shall be rejected and a full cut out shall be done.

Repairs are limited to a maximum of 30% of the weld length. Not more than two repairs are permitted on the same location. All repairs shall be carried out the day after initial radiography or earlier. A full report of all repairs made shall be submitted every day to the COMPANY.

13.2 Weld Rejected by Accumulation of Defects

Where a weld is rejected by the accumulation of defect clause, as defined by API-1104 and this specification, repairs within these limitations are permitted. Defects in the filling and capping passes shall be repaired preferentially.

Copyright VCS Quality Services Private Limited – All rights reserved

Digitally signed by RACHNA SHUKLA
Date: 2025.03.13 12:53:14 IST

ANNEXURE-I

1.0 DESTRUCTIVE TESTING OF WELDED JOINT - BUTT WELDS

1.1 Preparation

Having passed the visual and the non-destructive inspection, the test weld shall be subjected to mechanical test.

After satisfactory completion of all visual and non-destructive testing the procedure test weld shall be set-aside for a period not less than 24 hours. No further work on the test weld and no cutting of test specimens from the weld shall be performed until a period of at least 24 hours has expired.

Weld specimens shall be taken from the positions indicated in fig.1, 2, 3 & 4 of this specification from areas as free from defects as possible; for this reason, it is necessary to take the previous non-destructive tests into account. The minimum number of tests to be carried out is given in Table - 1 of this specification.

The test shall be carried out at laboratories approved by the COMPANY. The specimens shall be prepared in accordance with the figures given in the paragraphs that refer to the individual test.

1.2 Tensile Strength

Specimens shall be taken from the position indicated in fig.1, 2, 3 & 4 of this specification and Table-1 of this specification.

1.2.1 Method

The test shall be carried out in accordance with API 1104.

Copyright VCS Quality Services Private Limited – All rights reserved

Digitally signed by RACHNA SHUKLA
Date: 2025.03.13 12:53:14 IST

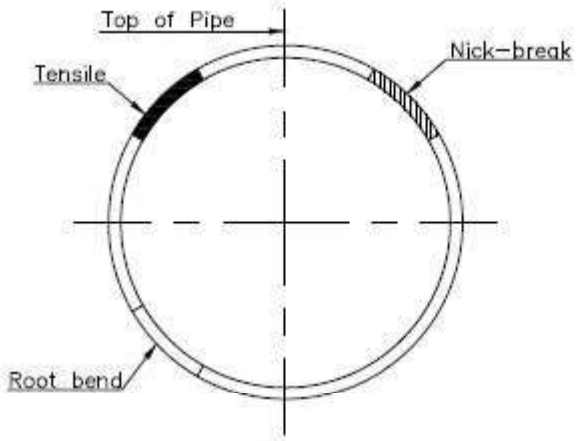

Under
2.375 in.(60.3mm)
FIG. -1

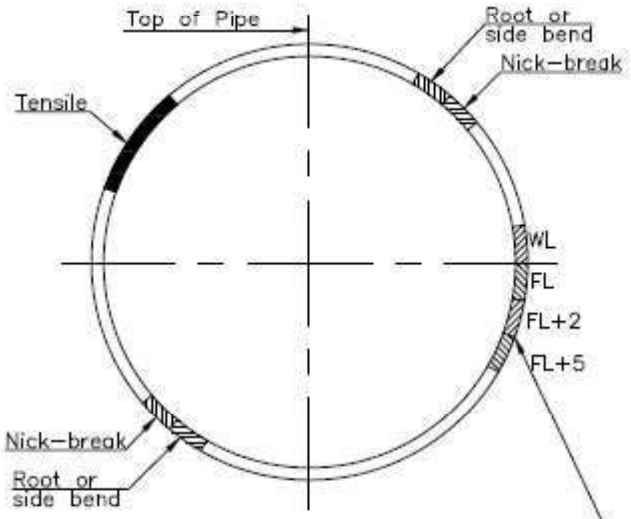

Greater than or equal to 2.375 in. (60.3mm) but less than or equal to 4.500 in. (114.3mm); also, less than or equal to 4.500 in. (114.3mm) when wall thickness is greater than 0.500 in.(12.7mm)

FIG. -2

Copyright VCS Quality Services Private Limited – All rights reserved

Digitally signed by RACHNA SHUKLA
Date: 2025.03.13 12:53:14 IST

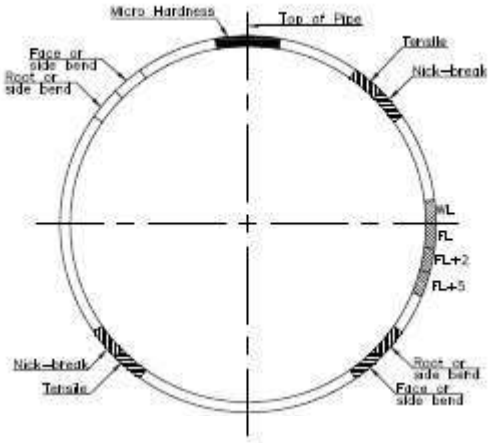

Greater than 4.500 in. (114.3mm); but less than or equal to 12.750 in. (323.9mm)
FIG. -3

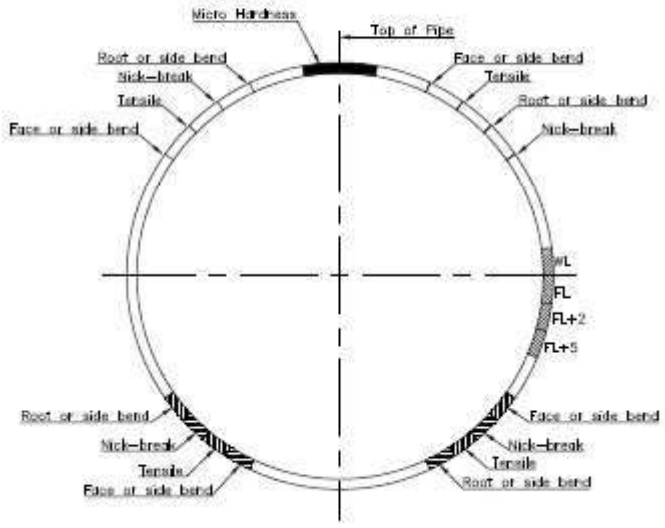

Greater than 12.750 in. (323.9mm)
FIG. -4

Copyright VCS Quality Services Private Limited – All rights reserved

Digitally signed by RACHNA SHUKLA
Date: 2025.03.13 12:53:14 IST

TABLE 1

OUTSIZE DIAMETER OF PIPE (mm)	NUMBER OF SPECIMENS							
	TENSILE STRENGTH	NICK BREAK	ROOT BEND	FACE BEND	SIDE BEND	MACRO & HARDNESS	IMPACT	TOTAL
	WALL THICKNESS ≤ (12.7 mm)							
<60.3	1	2	2	0	0	0	0	5
60.3 to 114.3	1	2	2	0	0	0	12	17
>114.3 to 323.9	2	2	2	2	0	2	12	22
>323.9	4	4	4	4	0	2	12	30
	WALL THICKNESS > (12.7 mm)							
≤ 114.3	1	2	0	0	2	0	12	17
>114.3 to 323.9	2	2	0	0	4	2	12	20
>323.9	4	4	0	0	8	2	12	30

1.3 Nick-Break Test

1.3.1 Preparation

Specification for nick-break test with notches thus worked can break in the base metal, instead of in the fusion zone; therefore, an alternative test piece may be used after authorization by the COMPANY with a notch cut in the reinforcement of outside weld bead to a maximum depth of 1.5mm, measured from the surface of the weld bead.

1.4 Macroscopic Inspection

1.4.1 Preparation

Copyright VCS Quality Services Private Limited – All rights reserved

Digitally signed by RACHNA SHUKLA
Date: 2025.03.13 12:53:14 IST

Specimens shall be taken from the positions indicated in Fig. 1 of this specification and shall be prepared in accordance with ASTM E2 and E3. The width of the macro section has to be at least three times the width of the weld. The section is to be prepared by grinding and polishing and etched to clearly reveal the weld metal and heat affected zone.

1.4.2 Method

Specimens shall be carefully examined under the microscope, with a magnification of at least 25 times (25:1). The COMPANY may ask for a macrograph with 5 times (5:1) magnification, for DOCUMENTATION purposes.

1.4.3 Requirements

Under macroscopic examination, the welded joints shall show good penetration and fusion, without any defect exceeding the limits stated in the evaluation criteria of the nick bream test

1.5 Hardness Test

1.5.1 Preparation

The prepared macro section is to be used for hardness testing using the vickers method with 10 kg load indentations are to be made along traverses each approximately 1 mm below the surface at both side of the weld.

In the weld metal a minimum of 6 indentations equally spaced along the traverses are to be made. The HAZ indentations are to be made along the traverses for approximately 0.5 mm each into unaffected material, and starting as close to the fusion line as possible.

One indentation at each side of the weld along each traverse has to be made on parent metal. Reference is made to Fig. 3 of this specification. The indentations are to be made in the adjacent region as well as on the opposite side of the macro section along the specified traverses.

1.5.2 Method

The test shall be carried out in accordance with recommendation ISO R81, Vickers hardness, using a laboratory type machine controlled as pre-recommendation ISO R 146 and using a diamond pyramid penetrator set at 2.37 rad (136") with a load of 10 kg.

1.5.3 Requirements

Hardness value shall not exceed the limit specified in welding specification chart. In case of a single reading strictly (+ IOHV) higher than the specified limit, further indentations shall be made to check if the high value was an isolated case.

Copyright VCS Quality Services Private Limited – All rights reserved

Digitally signed by RACHNA SHUKLA
Date: 2025.03.13 12:53:14 IST

All the hardness values contained from the heat-affected zone shall not exceed 100 HV with respect to the average hardness of the values obtained for the base metal. If these additional tests give hardness within the specification limit the slightly higher value may be accepted.

1.6 Charpy V-Notch Impact Test

1.6.1 Specimens shall be taken from the position indicated in Fig. 2 ,3 & 4 of this specification. The test specimens will be prepared in accordance with API 1104. Charpy V-Notch specimens shall have dimensions as given in Fig. 6 of the specification. Three test specimens shall be taken from each sample and they shall be cut and worked so that their length is transversal and perpendicular to the weld bead with the notch position as shown in Fig. 6 of this specification. The notch shall be to the roller surface perpendicular to the roller surface. The test shall be conducted at -29 deg C and as per ASTM A370.

1.6.2 Requirements (Note 1)

The impact energy shall be:

Test specimen in (mm)	Average of three specimen (Note 2) joule (Min.)	Minimum single value (Note 1)
10.0	27.0	22.0
7.5	21.5	17.5
5.0	18.5	15.0
2.5	10.0	8.0

Note:

(1) These values are specified for resistance to brittle fracture only. Where additional requirements are specified in project data sheet (Ex. pipeline materials with arrest properties i.e., a higher upper shelf Charpy V energy for resistance against propagating ductile fractures) the same shall be followed.

(2) Only one value is permitted to be lower than average value up to the value specified.

1.7 Bend Test Requirements

The Bend test Specimens shall be made and tested as per the requirements of API 1104 Latest edition (edition in force at the time of floating enquiry).The acceptance criteria shall be as per API 1104.

Copyright VCS Quality Services Private Limited – All rights reserved

Digitally signed by RACHNA SHUKLA
Date: 2025.03.13 12:53:14 IST

ANNEXURE-2

1.0 ULTRASONIC INSPECTION

In addition, the radiographic inspection, ultrasonic inspection is required as per conditions listed in paragraph 12.5 of this specification. This section concerns manual ultrasonic inspection. However ultrasonic inspection by automatic equipment may be used if approved by the COMPANY.

1.1 General:

The CONTRACTOR who carries out the ultrasonic inspections shall have sufficient no. of qualified personnel, equipment and instruments at his disposal to be able to affect the tests without hindering or delaying the pipeline assembly operations. The CONTRACTOR appointed to carry out ultrasonic inspections shall supply all the instruments necessary for their execution on site.

1.2 Specification for Ultrasonic Testing Procedure Qualification

Before work begins, the CONTRACTOR shall present a specification describing the proposed U.T. procedure qualification. This specification shall state, all the parameters described in API 1104 and the following information:

a) Type of U.T. Equipment used;

b) Type and dimensions of transducers

c) Frequency range

d) Details for calibration

e) Coupling medium

f) Inspection technique

g) Record details

h) Reference to the welding procedure where it is intended to adopt the specification

I) Temperature range of the joints to be inspected.

1.3 Qualification of Ultrasonic Inspection Procedure

The ultrasonic inspection procedure shall be approved by the COMPANY. Before inspection begins, the COMPANY may require the qualification test of the ultrasonic inspection procedure. This specification test consists in testing (under normal operating conditions) some CONTRACTOR welds made according to the same production procedure, where there are typical defects the test intends to detect.

This test shall be conducted in the presence of the COMPANY.

1.4 Test Procedure

Copyright VCS Quality Services Private Limited – All rights reserved

Digitally signed by RACHNA SHUKLA
Date: 2025.03.13 12:53:14 IST

Circumferential welds shall be inspected from both sides using angle probes. The surface with which the probe comes into contact shall be free of metal spatter, dirt, iron oxide, and scales of any type; therefore, it shall be necessary to clean a strip at least 50 mm wide on both sides of the weld with steel-wire brushes and anyhow the cleaned strip must be at least wide enough to allow one and a half skip examination.

If, during the test, echoes of doubtful origin appear, it shall be necessary to inspect a convenient area on the pipe surface, close to the weld, with a straight beam transducer in order to check whether any manufacturing defects are present which could have interfered with the ultrasonic beam.

By way of an example, the equipment shall include but not be limited to the following:

a) Ultrasonic equipment and coupling medium

b) Sample sections for calibration of instruments

c) Equipment for cleaning of surface to be examined

d) Rules calibrated in centimeters for exact location of the position of defects.

The characteristics of the above listed instruments and equipment shall guarantee:

a) That the required standards of the inspection procedure, as previously established an approved by the COMPANY, are satisfied.

b) Continuous operation

All the instruments and equipment shall be approved by the COMPANY before being used. The COMPANY has the authority to reject any item that is considered unsuitable. The decision of the COMPANY is final. The CONTRACTOR appointed to carry out ultrasonic inspections shall also ensure the operational efficiency and maintenance of the instruments and equipment, and shall immediately substitute any item rejected by the COMPANY.

All the instruments and equipment necessary for carrying out ultrasonic inspection on site shall satisfy the requirements laid down by the public boards of institutions that regulate 'safety at work'.

1.5 Ultrasonic Instruments

The ultrasonic instrument:

a) Shall be pulse echo type, able to generate, receive and display, on the screen a Cathode Ray Tube (CRT), pulse at frequencies between 1 and 6 MHz. The useful part of the CRT screen shall be at least 70mm wide and at least 50mm high shall have variable amplification, with steps of 1 or 2 dB over a range of a least 60 dB.

Copyright VCS Quality Services Private Limited – All rights reserved

Digitally signed by RACHNA SHUKLA
Date: 2025.03.13 12:53:14 IST

b) the regulation control shall be accurate to within ±I dB and this accuracy shall be certified by the instrument manufacturer.

c) may be powered by a battery or an electric generator. In the first case, the autonomy of operation (endurance) of the instrument shall be sufficient to carry on working without frequent interruptions, and the instrument shall be equipped with an automatic switch which switches if off when the battery runs down; in the second case, there must be a voltage stabilizing device with a tolerance of ±2 Volts.

1.6 Probes

The probes used shall have dimensions, frequencies, and a refraction angle suited to the type of steel, the diameter, and the thickness of the pipeline and to the joint design.

1.7 Reference Sample Pieces

The efficiency of the equipment used, the effective refraction angle of the probe, and the beam output point, shall be checked using a VI and V2 sample block, IIW type or the calibration block ASTM E-428.

For manual ultrasonic testing and automated ultrasonic testing, the reference sample pieces shall be as described in API 1104, Nineteenth Edition, para 11.4.5.

1.8 Calibration

The calibration, qualification of the testing procedure shall be done as provided in API 1104.

1.9 Regulation of Amplification during Production Testing

Scanning sensitivity shall be as provided in API 1104 para 11.4.7.2 & 11.4.7.3. 1.10 Qualification of Ultrasonic Testing Operators for Automatic UT. Before the inspection begins or during the same inspection, the COMPANY may require a qualification test for the ultrasonic equipment operators.

The operators shall be fully qualified as per a recognized standard (ASME Sec V or equivalent) and they shall have as minimum level II as described in API II04. The operators shall be able to:

a) calibrate the equipment;

b) perform an operational test under production conditions;

c) interpret the screen picture;

d) evaluate the size and location of reflectors

e) interpret the type of defects detected

The COMPANY has the option of checking the ability of personnel employed for ultrasonic

Copyright VCS Quality Services Private Limited – All rights reserved

Digitally signed by RACHNA SHUKLA
Date: 2025.03.13 12:53:14 IST

Testing by means of qualification tests.

1.11 Evaluation of Indications given by Ultrasonic Tests

Each time that echoes from the weld bead appear during production testing, the instrument amplification shall be altered to coincide with the reference amplifications and the probe shall be moved until maximum response is obtained, paying attention all the time to the probe-tube coupling.

If, under these conditions, the height of the defect echo is equal to or greater than that of the reference echo, the defect shall be evaluated according to clause 12.5 of this specification. If the defect has also been detected by the radiographic and/or visual examination, the dimensions shall be judged according to the type of examination which detects the greater defect. Returns that are less than 50% of the reference echo will not be considered. If returns are above 50% but lower than 100% of the reference echo, and if the operator has good reasons to suspect that the returns are caused by unfavorably oriented cracks, he shall inform the COMPANY. Moreover, when there is a defect to be repaired, such defect shall be removed for a length corresponding to the one where no more return echo is given.

1.12 Other Equipment

The use of rules calibrated in centimeters, attached if possible, to the probe, for the precise location of the position of welding defects, is recommended. Defect location is affected by measuring the projection distance between the probe output and the reflecting surface.

The operators carrying out the tests shall have, besides the probing instrument, tools for cleaning the pipe surface (files, brushes, etc.) as well as the coupling liquid or paste appropriate for the temperature of the section to be examined.

Copyright VCS Quality Services Private Limited – All rights reserved

Digitally signed by RACHNA SHUKLA
Date: 2025.03.13 12:53:14 IST

ANNEXURE-3

RADIOGRAPHY

1.0 SCOPE

This annexure covers the radiographic inspection of all types of welded joints of the main pipeline.

The welded joints shall include the following:

i) Full girth welds on the mainline construction including double jointing of pipe, if adopted.

ii) Welds for installation of block valves, insulating joints and other appurtenances and tie-ins.

iii) Welds at scraper launching and receiving barrels.

iv) Terminal Piping

2.0 APPLICABLE STANDARDS

This specification shall apply in conjunction with the following (all latest editions):

i) API 1104, Standard for welding Pipelines and Related Facilities

ii) ANSI B 31.8, Code for Gas Transmission and Distribution Piping Systems.

iii) ANSI B 31.4, Code for Transportation System for Hydrocarbons, Liquid Petroleum Gas, Anhydrous Ammonia and Alcohols.

iv) ASTM E 94, Recommended practice for Radiographic Testing

v) ASTM E 142, Standard Method for Controlling Quality of Radiographic Testing

vi) The American Society for Nondestructive Testing. Recommended Practice no. SNT-TC-IA Supplement A.

3.0 PROCEDURE

3.1 The radiographic examination procedure to be adopted shall be submitted by the CONTRACTOR as per Exhibit-F.

3.2 The procedure of radiographic examination shall be qualified to the entire satisfaction of COMP ANY prior to use. It shall include but not be limited to the following requirements:

i) Lead foil intensifying screens, at the rear of the film shall be used for all exposures.

ii) Type 2 and 3 films as per ASTM E-94 shall be used.

Copyright VCS Quality Services Private Limited – All rights reserved

Digitally signed by RACHNA SHUKLA
Date: 2025.03.13 12:53:14 IST

iii) A densitometer shall be used to determine film density. The transmitted film density shall be between 2.0 and 3.5 throughout the weld. The unexposed base density of the film shall not exceed 0.30.

iv) Radiographic identification system and documentation for radiographic interpretation reports and their recording system.

3.3 The CONTRACTOR shall qualify each procedure in the presence of the COMPANY prior to use.

3.4 The procedure of radiographic examination shall produce radiographs of sufficient density, clarity and contrast so that defects in the weld or in the pipe adjacent to the weld are clearly discernible.

3.5 One Check shot of the full joint on main line welds shall be taken per 100 circumferential welds or one per day of the production whichever is more for cross checking the correctness of the radiographs of weld joints executed by the contractors. For taking check shots on completed/accepted sections, contractor has to separately mobilize either internal crawler/external X-ray unit, as appropriate.

3.6 All the girth welds of mainline shall be subjected to 100% radiographic examination. The CONTRACTOR shall furnish all the radiographs to the COMPANY, immediately after processing them, together with the corresponding interpretation reports on approved format. The details of the radiographs along with the joint identification number shall be duly entered in a register and signed by the CONTRACTOR and submitted to the COMPANY for approval.

3.7 When the radiation source and the film are both on the outside of the weld and located diametrically opposite each other, the maximum acceptable length of film for each exposure shall not exceed the values given. The minimum film overlap, in such cases, shall be 40mm. The ellipse exposure technique may be used on nominal pipe sizes of 2 inch and smaller provided that the source of film distance used is a minimum of 12 inch.

3.8 Three copies of each acceptable radiographic procedure (as per Exhibit-F) and three copies of radiographic qualification records shall be supplied to COMPANY. One set of the qualifying radiographs on the job shall be kept by the CONTRACTOR's authorized representative to be used as a standard for the quality of production radiographic during the job. The other two sets shall be retained by COMPANY for its permanent record.

3.9 Three copies of the exposure charts relating to material thickness, kilo voltage, source of film distance and exposure time shall also be made available to COMPANY by the CONTRACTOR.

3.10 The CONTRACTOR shall, on a daily basis, record for each radiograph (1) radiograph's number, (2) approximate chainage of weld location, (3) whether or not the welds meet the specified acceptance standards and (4) the nature and approximate location of unacceptable defects observed. It must be possible to relate back to a particular butt weld and welder on piping drawing and pipeline alignment drawing.

Copyright VCS Quality Services Private Limited – All rights reserved

Digitally signed by RACHNA SHUKLA
Date: 2025.03.13 12:53:14 IST

3.11 Each day's production of processed radiographs shall be properly packaged separately, identified by at least the (1) date, (2) radiographic unit, (3) job locations, (4) starting and ending progress survey stations and (5) shall include original and three copies of the daily radiographic record. The package shall be submitted to the COMPANY daily when possible, but in no event later than noon of the following day.

3.12 The CONTRACTOR shall provide all the necessary facilities at site, such as a dark room with controlled temperature, film viewer etc. to enable the COMPANY to examine the radiographs.

3.13 The CONTRACTOR, if found necessary, may modify the procedure of radiographic examination suiting to the local conditions prevailing. This shall, however, be subject to the approval of the Company.

3.14 COMPANY shall have free access to all the CONTRACTOR's work facilities in the field.

3.15 Any approval granted by the COMPANY shall not relieve the CONTRACTOR of his responsibilities and guarantees.

4.0 RADIATION SOURCE

4.1 Radiographic examination shall be carried out using X-radiations; radiographic examination by Gamma rays using slow speed films may be allowed, at the discretion of the COMPANY, in case of inaccessible joints. Radiography by Gamma ray for tie-in-joints shall be acceptable provided D4 AGF A film or equivalent is used and the required sensitivity obtained.

4.2 Whenever possible, pipeline welds will be inspected by placing the radiation source inside the pipe. on the pipeline axis. with a radiation of 6.28 red. (360).

5.0 LEVEL OF QUALITY

The quality level of Radiographic sensitivity required for radiographic inspection shall be at least equivalent to the values in Figure-7.

6.0 PENETRAMETERS

The Image Quality Indicator (abreviation: IQI) shall be used for the qualification of the welding procedure and during normal line production. Radiographic sensitivity shall be measured with the wire image quality indicator (Penetrameter). The Penetrameter shall be selected according to DIN-54109 or ISO-l 027. For radiographs made with the source on the outside, a Penetrameter shall be placed on each side of the film with the smaller wire of the Penetrameter turned towards the end of the film itself. When a complete weld is radiographed in a single exposure using a source inside the piping, four pentrameters approximately equally spaced around the circumference shall be used. During the procedure qualification, IQI shall be placed both on the source side and on the film side.

The sensitivity obtained with IQI on the source side shall not be less than the values shown in Fig. 7 of this specification. The sensitivity limit may be considered to have

Copyright VCS Quality Services Private Limited – All rights reserved

Digitally signed by RACHNA SHUKLA
Date: 2025.03.13 12:53:14 IST

been reached when the outline of the IQI, its identification number and the wire of the required diameter show up clearly on the radiograph.

The COMPANY may authorize use of types of IQI other than those planned, provided that they conform with recognized standards and only if the CONTRACTOR is able to demonstrate that the minimum sensitivity level required is obtained. For this demonstration, a test shall be carried out comparing the IQI specified and the CONTRACTORs to show up the identification number and other details of the proposed IQI, which must be visible in the test radiograph.

7.0 FILM IDENTIFICATION MARKERS

All films shall be clearly identified by lead numbers, letters, and/or markers. The image of the markers shall appear on the films, without interfering with the interpretation. These markers positions shall also be marked on the part to be radiographed and shall be maintained during radiography.

8.0 PROTECTION AND CARE OF FILM

8.1 All unexposed films shall be protected and stored properly as per the requirements of API1104 standard and ASTM E.94.

8.2 The exposed and unexposed film shall be protected from heat, light, dust and moisture. Sufficient shielding shall be supplied to prevent exposure of film to damaging radiation prior to and following the use of the film for radiographic exposure.

9.0 RE-RADIOGRAPHY

9.1 The weld joints shall be re-radiographed in case of unsatisfactory quality of the radiographs, at the expense of the CONTRACTOR.

9.2 All the repaired weld joints shall be re-radiographed at no extra cost to the COMPANY in the same manner as that followed for the original welds. In addition, the repaired weld areas shall be identified with the original identification number plus the letter R to indicate the repair.

9.3 When evaluating repair film, radiographers shall compare each section (exposure) of the weld with the original film to assure repair was correctly marked and original defect removed.

9.4 The COMPANY will review prior to any repair of welds, all the radiographs of welds that contain, according to the CONTRACTOR's interpretation, unacceptable defects. The final disposition of all unacceptable welds shall be decided by the COMPANY.

10.0 QUALIFICATION OF RADIOGRAPHERS

10.1 Pipeline radiographers shall be qualified in accordance with the requirement of API 1104 and to the full satisfaction of COMPANY.

10.2 Certification of all the radiographers, qualified as per 10.1 above, shall be furnished by the CONTRACTOR to the COMPANY before a radiographer will be

Copyright VCS Quality Services Private Limited – All rights reserved

Digitally signed by RACHNA SHUKLA
Date: 2025.03.13 12:53:14 IST

permitted to perform production radiography. The certificate record shall include:

i) Background and Experience Record

ii) Training Course Record

iii) Technical Examination Record

iv) Doctor's report on radiographer's Jacque 0-1 acquity eye test

v) Date of qualification

10.3 The radiographers shall be required to qualify with each radiographic procedure they use, prior to performing the work assigned to him in accordance with the specification.

11.0 PRESERVATION OF RADIOGRAPHS

11.1 The radiographs shall be processed to allow storage of films without any discoloration for at least three years. All the radiographs shall be presented in suitable folders for preservation along with necessary documentation.

11.2 All radiographs shall become property of the COMPANY.

12.0 EQUIPMENT AND ACCESSORIES

12.1 CONTRACTOR shall make necessary arrangements at his own expense, for providing the radiographic equipment, radiographic films and all the accessories for carrying out the radiographic examination for satisfactory and timely completion of the job.

12.2 For carrying out the mainline radiographic examination the CONTRACTOR shall be equipped with suitable mobile/stationary type dark rooms. These shall have all the required facilities for film processing. Film viewer used shall be equipped with the film illuminator that has a light source of sufficient intensity and suitably controlled to allow viewing film densities up to 4.0 without damaging the film.

13.0 RADIATION PROTECTION

13.1 CONTRACTOR shall be responsible for the protection and personnel monitoring of every man with or near radiation sources.

13.2 The protection and monitoring shall comply with local regulations.

13.3 In view of visual hazards in the handling of Radioactive source of material, CONTRACTOR shall be solely responsible for complying with all rules and regulations set forth by Atomic Energy Commission or any other Government agencies of India in this regard and COMPANY shall not be responsible and shall be kept indemnified by the CONTRACTOR for default (s) of whatever nature by the CONTRACTOR. Safety equipment as considered adequate by the COMPANY

Copyright VCS Quality Services Private Limited – All rights reserved

Digitally signed by RACHNA SHUKLA
Date: 2025.03.13 12:53:14 IST

for all necessary personnel shall be made available for use and maintained for immediate and proper use by the CONTRACTOR.

14.0 DISPLAY OF SAFETY INSTRUCTIONS

The safety provisions shall be brought to the notice of all concerned by display on a notice board at prominent place at the work spot. The person responsible for the "Safety" shall be named by the CONTRACTOR.

15.0 ENFORCEMENT OF SAFETY REGULATIONS

To ensure effective enforcement of the rules and regulations relating to safety precautions, the arrangement made by the CONTRACTOR shall be open to inspection by COMPANY or its representatives.

16.0 FIRST AID AND INDUSTRIAL INJURIES

16.1 CONTRACTOR shall maintain first aid facilities for its employees and those of sub-Contractors.

16.2 CONTRACTOR shall make outside arrangements for ambulance service and for treatment of industrial injuries. Names of those providing these services shall be furnished to COMPANY prior to start of work and their telephone no. Shall be posted prominently in CONTRACTOR'S field office.

16.3 All critical industrial injuries shall be reported promptly to the COMPANY and a copy of CONTRACTOR's report covering each personal injury requiring the attention of physician shall be furnished to the COMPANY.

17.0 NO EXEMPTION

Notwithstanding the above there is nothing in these to exempt the CONTRACTOR from the operation of any other act or rules in force.

Copyright VCS Quality Services Private Limited – All rights reserved

Digitally signed by RACHNA SHUKLA
Date: 2025.03.13 12:53:14 IST

EXHIBIT- A

ELECTRODE QUALIFICATION TEST RECORD

A. Tested at (Site name) : Date:

Manufacturer's Name :

Brand Name: :

Batch Number & Size tested :

Classification & Code :

Intended for welding in position: :

In combination with (if any) :

Code of Reference (used for testing) :

Special Requirements (if any) :

B. All-weld Tensile Test :

Base Material used :

Pre-heat temperature :

Post weld heat treatment details: :

Visual examination :

Radiographic examination results :

Tensile test results :

Identification No.	U.T.S.	Yield Point	Elongation	Remarks
1.				
2.				

C. Impact Test Results

Test Temperature : Notch in

Type of Specimens (Charpy) :

Size of Specimens

Copyright VCS Quality Services Private Limited – All rights reserved

Digitally signed by RACHNA SHUKLA
Date: 2025.03.13 12:53:14 IST

Specimen No.	Impact Value	Average
1		
2		
3		
4		
5		

D. Chemical Analysis Results

Electrode Size Result :

Batch No. :

%C	%S	%P	%Si	%Mn	%Cr	%Ni	%Mo	Other

.....	.....	.....
PREPARED BY (CONTRACTOR)	**REVIEWED BY (CONTRACTOR)**	**APPROVED (PMC/OWNER)**

Copyright VCS Quality Services Private Limited – All rights reserved

Digitally signed by RACHNA SHUKLA
Date: 2025.03.13 12:53:14 IST

EXHIBIT- B

STRESS RELIEF HEAT TREATMENT PROCEDURE SPECIFICATION

Name of the Heat-treater :
Name of the Project : Specification Reference No.

1. General Detail:
   Name of the Equipment:
   Name of the Assembly/Part:
   Drawing No:
   Material:

2. Furnace Details
   Type of Heating : Gas/Oil/Elect.
   Res/ induction Type of Heating
   Capacity (Size)
   Maximum Temp. (C) :
   Method of temp. Measurement
   Atmosphere Control :

3. Heat Treatment Cycle Details
   Charging Temp. C
   Rate of heating, C/Hr.
   Soaking Temp. C
   Soaking Time, hrs.
   Rate of Cooling, C/Hr.
   Mode of Cooling

4. Other Details, if any :
   Notes:

   The following documents shall be furnished along with the specifications:
   i) Material test certificates
   ii) Assembly/Part Drawing.

.....	.....	.....
PREPARED BY CONTRACTOR)	**REVIEWED BY (CONTRACTOR)**	**APPROVED BY (PMC/OWNER)**

Copyright VCS Quality Services Private Limited – All rights reserved

Digitally signed by RACHNA SHUKLA
Date: 2025.03.13 12:53:14 IST

EXHIBIT- C

QUALIFICATION WELD REPORT

Date_____ Test No._____ Test Type: _____ Procedure _____Welder
Location _____
Welder (s) _____
Material Grade 1 _____
Material Grade 2 _____
Outside Diameter _____ Wall Thickness _____
Joint Type _____ Bevel Angle _____
Backing Type (if applicable) _____ Roll or Fixed Position _____

RECORDED WELDING PARAMETERS

Pass	Process and Direction of Welding	Filler Metal Classification and Diameter	Shielding Gas type and flow rate or shielding flux	Preheat / Interpass Temperature	Voltage	Amperage	Travel Speed	Heat Input
Root Bead								
Second Bead								

Note: Number of weld beads are not intended to be limited by this table and the table should be adjusted to present all required passes.

Time between passes: Root Bead to 2nd Bead: _____ , 2nd bead to 3rd bead: _____
Cooling Method (if applicable) _____
PWHT_____

MECHANICAL TEST RESULTS

TENSILE TESTS Report Number : _____

Specimen Number	Tensile 1	Tensile 2	Tensile 3	Tensile 4
Location				
Original specimen dimensions				
Original specimen area				
Maximum load				
Tensile strength				
Fracture Location				

NICK BREAK TEST Report Number :

Specimen Number	Nick 1	Nick 2	Nick 3	Nick 4	Nick 5	Nick 6	Nick 7	Nick 8
Location								
Result								

BEND TESTS Report Number:

Specimen Type and Number								
Location								
Result								

Remarks

Test made at _____ Date _____
Tested by _____ Supervised by _____

Sample Qualification Weld Report Form

Copyright VCS Quality Services Private Limited – All rights reserved

Digitally signed by RACHNA SHUKLA
Date: 2025.03.13 12:53:14 IST

WELDING PROCEDURE SPECIFICATION

WPS Number _____

Process(es)Method of Application _____

Material grade(s) _____

Outside diameter _____ Wall thickness _____

Joint type _____ Bevel angle _____

Backing type (if applicable) _____ Roll or fixed position _____

Direction of welding _____ Number of welders _____

Preheat temperature _____ Interpass Temperature _____

Method of Heating _____

Filler metal(s) and Flux _____

Flame characteristics _____ Cleaning and/or grinding tools _____

Type and removal of lineup clamp _____ Minimum number of passes _____

Maximum time between root pass and start of the second pass _____ Maximum time between second pass and start of third pass _____

Method of cooling _____ PWHT procedure _____

JOINT DESIGN

SEQUENCE OF BEADS

WELDING PARAMETERS

Pass	Process / Electrical Characteristics	Filler Metal Group or Classification	Electrode Size	Shielding Gas Type and Flow Rate or Shielding Flux	Voltage Range	Amperage Range	Travel Speed Range	Heat Input Range
Root Bead								
Second Bead								

Note: Number of weld beads are not intended to be limited by this table and the table should be adjusted to present all required passes.

Supporting qualification weld report No(s) _____

Approved by _____

Sample Qualification Weld Report Form

.....	.....	.....
PREPARED BY CONTRACTOR)	**REVIEWED BY (CONTRACTOR)**	**APPROVED BY (PMC/OWNER)**

Copyright VCS Quality Services Private Limited – All rights reserved

Digitally signed by RACHNA SHUKLA
Date: 2025.03.13 12:53:14 IST

EXHIBIT- D

Example of record form for welder qualification test

Welder test certificate	Test no
Project/Contract	Date
Contractor	Inspector
Welder's name	
Address	
Pipe material	
Pipe thickness	
Pipe outside diameter	
Welding process	Root
	Fill and Cap
Reason for failure	
Visual	
Non-destructive testing	
Butt joint	
Fillet weld	
'Number of attempts	
Comments	
Accepted date/Time	

Signed by Contractor

Signed by Inspector

*Delete as necessary

Copyright VCS Quality Services Private Limited – All rights reserved

Digitally signed by RACHNA SHUKLA
Date: 2025.03.13 12:53:14 IST

EXHIBIT- E

Welder's Identification Card

Name	:	
Identification	:	Photograph
Date of Testing	:	
Valid till	:	
Approval of Welding	:	
Welding Position	:	
Material	:	
Diameter	:	
Diameter range approved	:	
Wall thickness	:	
Thickness range approved	:	
Type of welding consumables	:	

Approved by: Employers' Signature with seal

Copyright VCS Quality Services Private Limited – All rights reserved

Digitally signed by RACHNA SHUKLA
Date: 2025.03.13 12:53:14 IST

EXHIBIT- F

Radiographic Procedure for Pipe Welding

1. Location
2. Date of Testing
3. Name of Supervised Contractor
4. Material
5. Dia & Thickness
6. Type of weld joint
7. Radiation Source (X-ray, iridium)
8. Type of equipment (External/Internal)
9. Intensifying screens and material
10. Filter type and placement mask, Diaphragm Lead screen etc. adjacent to radiation source or specimen,
11. Exposure Geometry (Source focal spot size, object to film distance, radiation angle with respect to weld and film).
12. Limit of film coverage
13. Film type and make
14. Exposure Conditions (rna, KV, time)
15. Processing (time temperature for development stop bath or rinse, fixation, washing, drying etc.)
16. Density
17. Sensitivity
18. Type of penetrameter
19. Essential wire to be seen on source side:
20. Essential wire accepted for film side viewing:

Approval of the COMPANY

Signature of CONTRACTOR with seal

Copyright VCS Quality Services Private Limited – All rights reserved

Digitally signed by RACHNA SHUKLA
Date: 2025.03.13 12:53:14 IST

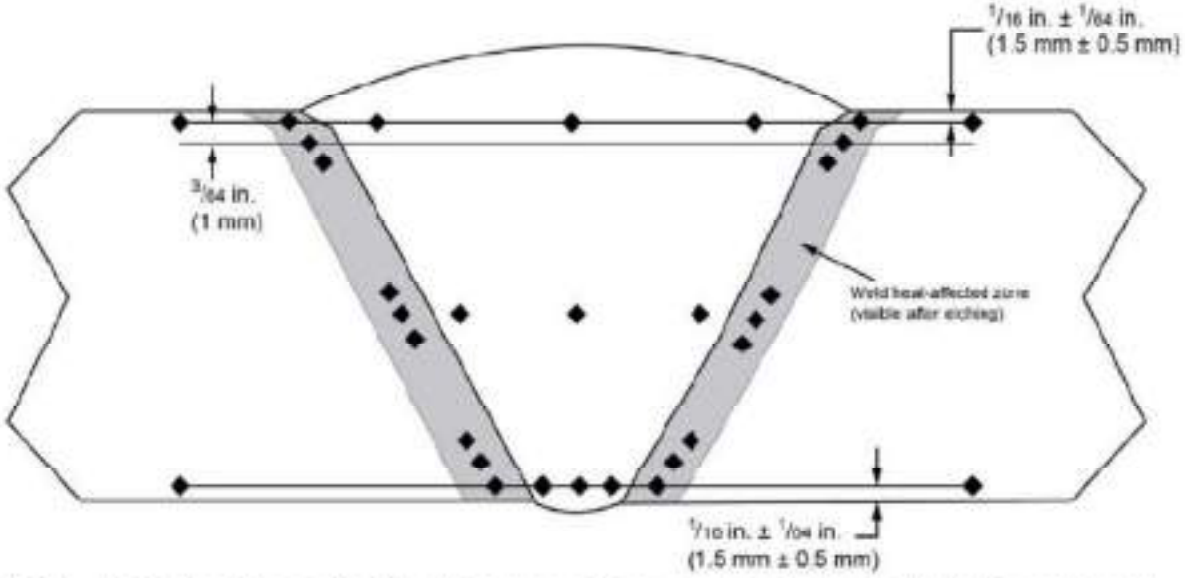

NOTE Heat-affected zone (HAZ) hardness impressions must be entirely within the HAZ and located as close as possible to the fusion boundary (between the weld metal and HAZ). The wall thickness of the specimen may prevent all the indents as shown from being made, particularly along the mid-point of the specimen.

HARDNESS TESTING – BUTT WELDS

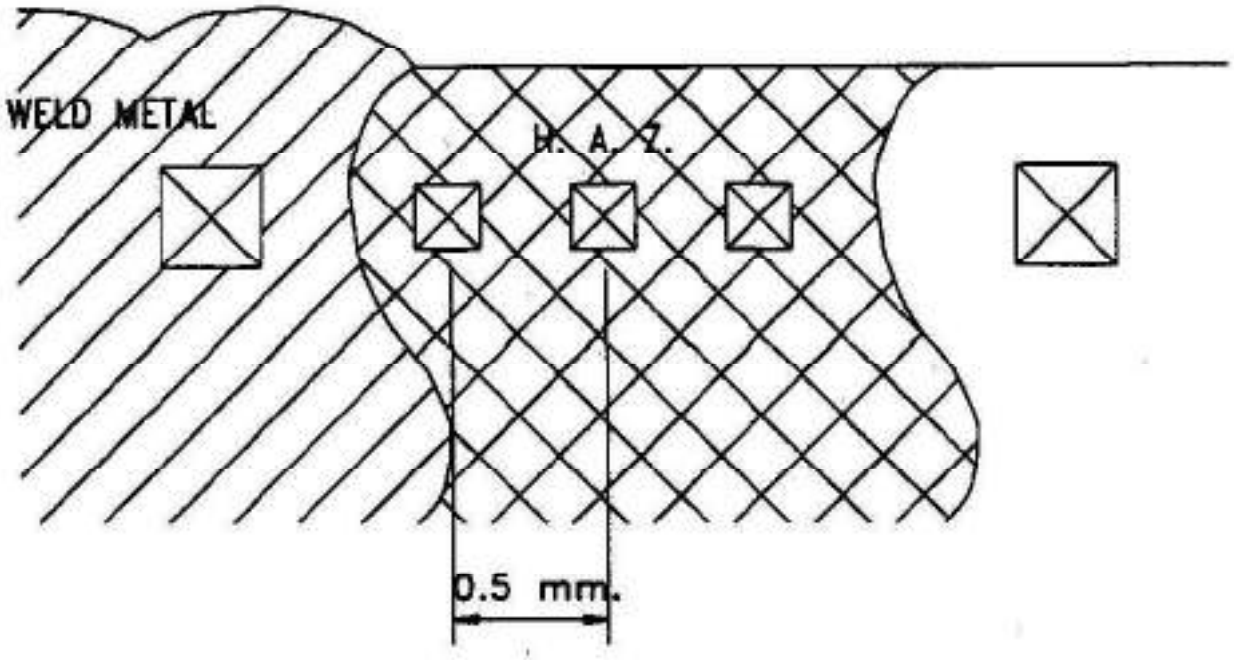

FIGURE 5

HARDNESS TESTING OF WELD JOINTS – SCHEMATIC

Copyright VCS Quality Services Private Limited – All rights reserved

Digitally signed by RACHNA SHUKLA
Date: 2025.03.13 12:53:14 IST

NOTCH POSITIONS

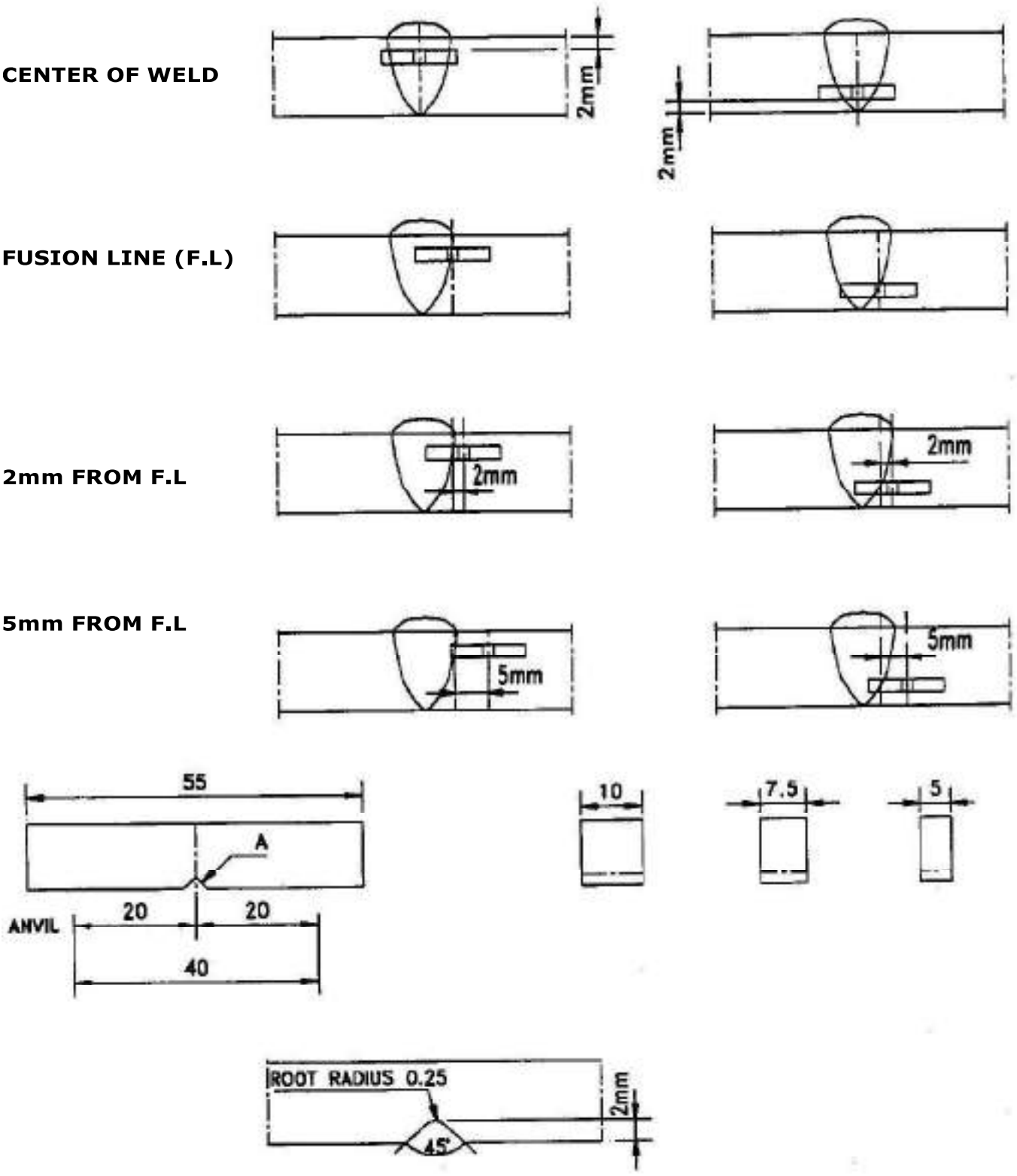

FIGURE 6

CHARPY V – NOTCH TEST SPECIMEN

Copyright VCS Quality Services Private Limited – All rights reserved

Digitally signed by RACHNA SHUKLA
Date: 2025.03.13 12:53:14 IST

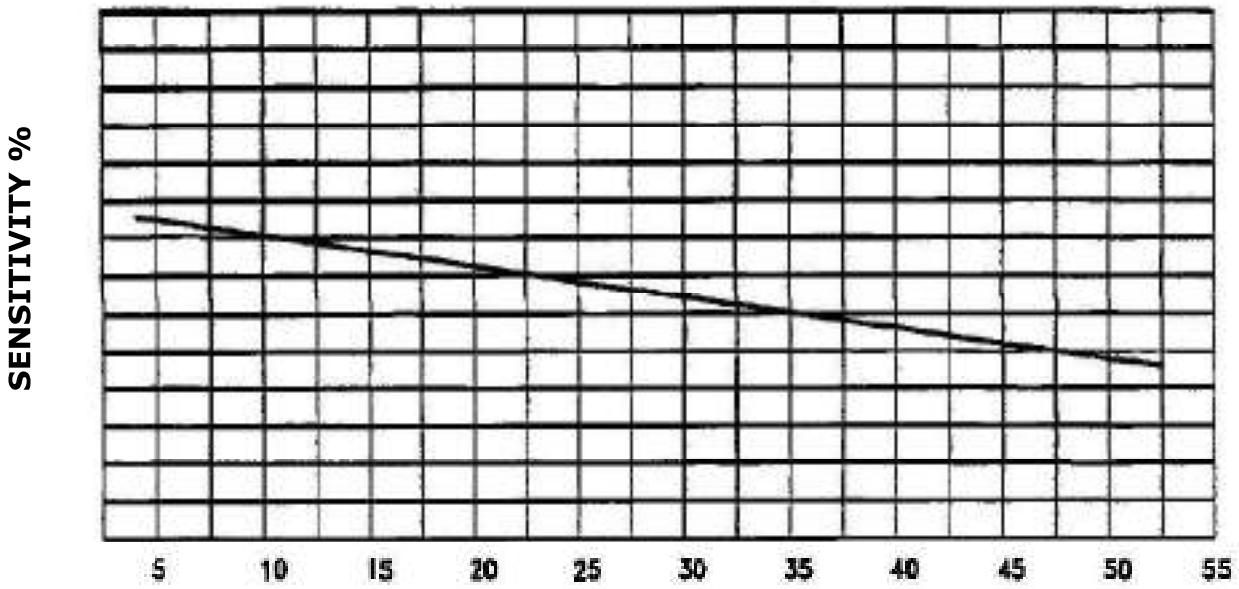

PIPE WALL MATERIAL THICKNESS mm

Figure-7

NOTE:-

FOR PRODUCTION RADIOGRAPHY, SENSITIVITY REDINGS BASED ON FILM ON SIDE PENTRAMETERS ARE TO BE JUDGED AS PER RESULT FROM THE PROCEDURE QUALIFICATION WITH PENTRAMETERS PLACED ON THE SOURE SIDE

Copyright VCS Quality Services Private Limited – All rights reserved

Digitally signed by RACHNA SHUKLA
Date: 2025.03.13 12:53:14 IST

WELDING SPECIFICATION CHARTS TO SPECIFICATION FOR WELDING OF ONSHORE GAS PIPELINES

4"/6"/8"/10"/12" LINE PIPE THK RANGE 6.4 to 8.7 mm				
MATERIAL SPECIFICATIONS	PIPES	**API 5L Gr X-52 PSL 2**		
	FITTINGS	-		
	FLANGES	-		
	OTHERS	-		
BASE METAL 'P' NO	**1**			
WELDING PROCESS	**GROOVE JOINTS SINGLE SIDE BEVEL**			
	BUTT		**OTHER THAN BUTT**	
	ROOT PASS : **SMAW**	FILLER PASS : **SMAW**	ROOT PASS : **N.A.**	FILLER PASS : **N.A.**
	FILLET JOINTS / SOCKET JOINTS : **N.A.**			
WELDING MATERIAL	**GROOVE JOINTS**			
	BUTT		**OTHER THAN BUTT**	
	ROOT PASS : **E6010** HOT PASS: **E7010**	FILLER PASS & CAPPING: **E7010**	ROOT PASS : **N.A.**	FILLER PASS : **N.A.**
	FILLET JOINTS / SOCKET JOINTS : **N.A.**			
	BACKING RING : N.A.		**CONSUMABLE INSERT : N.A.**	
JOINT PREPARATION	**API 1104 / ASME SEC. –IX, latest edition**			
GASES	PURGING :		SHIELDING :	
GAS COMPOSITION	PURGING :		SHIELDING :	
PREHEATING	PREHEAT TEMP: 100 ^{0}C MIN		POST HEATING :	
CONTINUITY OF WELDING AND PREHEAT : REFER TO SPECIFICATION				
POST WELD HEAT TREATMENT	HOLDING TEMP :	**N.A.**	HOLDING TIME :	
	RATE OF HEATING:	**N.A.**	MIN. HOLDING TIME :	
	METHOD OF COOLING :	**N.A.**	RATE OF COOLING :	
			WIRE SPEED	
MECHANICAL PROPERTY REQUIREMENTS	CHARPY 'V' NOTCH VALUE :		MIN: **22 J**	AVERAGE : **27 J**
	AT TEMPERATURE :		0°C	
	HARDNESS :			
CODE OF FABRICATION :	**API 1104 / ASME SEC. –IX / B 31.8**			

TECHNICAL NOTES :

1. The Non-Destructive Testing (NDT) shall be examined by X-ray using internal crawlers.

ENERGISING QUALITY	**WELDING SPECIFICATION CHART**	**Specification No. :** **VCS/WSC/01**	**Rev.** **0**

Digitally signed by RACHNA SHUKLA
Date: 2025.03.13 12:53:14 IST

WELDING SPECIFICATION CHARTS TO SPECIFICATION FOR WELDING OF ONSHORE GAS PIPELINES

<table>
<tr><td colspan="2">PIPING CLASS:</td><td colspan="4">15HC, 30HC, 60HC</td></tr>
<tr><td rowspan="4">MATERIAL SPECIFICATIONS</td><td>PIPES</td><td colspan="4">ASTM A106 GR.B, API 5L GR B PSL2, API 5L X52 PSL2 ASSORTED PIPES</td></tr>
<tr><td>FITTINGS</td><td colspan="4">ASTM A105, ASTM A234 GR.WPB, ASTM A234 RG.WPB-W, MSS SP-75 GR.WPHY-52</td></tr>
<tr><td>FLANGES</td><td colspan="4">ASTM A105, ASTM A694 GR.F-52</td></tr>
<tr><td>OTHERS</td><td colspan="4">-</td></tr>
<tr><td colspan="6"></td></tr>
<tr><td>BASE METAL ‘P’ NO</td><td colspan="5">1</td></tr>
<tr><td rowspan="4">WELDING PROCESS</td><td colspan="3">GROOVE JOINTS SINGLE SIDE BEVEL</td><td colspan="2"></td></tr>
<tr><td colspan="2">BUTT</td><td colspan="3">OTHER THAN BUTT</td></tr>
<tr><td>ROOT PASS : GTAW/SMAW</td><td>FILLER PASS : GTAW/SMAW</td><td>ROOT PASS : GTAW</td><td colspan="2">FILLER PASS : GTAW/SMAW</td></tr>
<tr><td colspan="5">FILLET JOINTS / SOCKET JOINTS : SMAW</td></tr>
<tr><td colspan="6"></td></tr>
<tr><td rowspan="4">WELDING MATERIAL</td><td colspan="5">GROOVE JOINTS</td></tr>
<tr><td colspan="2">BUTT</td><td colspan="3">OTHER THAN BUTT</td></tr>
<tr><td>ROOT PASS : ER70S-2/ E6010</td><td>FILLER & CAP PASS ER70S-2/ E7018-1</td><td>ROOT PASS : ER70S-2</td><td colspan="2">FILLER PASS : ER70S-2/ E7018-1</td></tr>
<tr><td colspan="5">FILLET JOINTS / SOCKET JOINTS : E7018-1</td></tr>
<tr><td colspan="2">BACKING RING : N.A.</td><td colspan="3">CONSUMABLE INSERT : N.A.</td></tr>
<tr><td colspan="6"></td></tr>
<tr><td colspan="2">JOINT PREPARATION</td><td colspan="4">API 1104 / ASME SEC. –IX</td></tr>
<tr><td colspan="6"></td></tr>
<tr><td colspan="2">GASES</td><td colspan="2">PURGING :</td><td colspan="2">SHIELDING : Argon</td></tr>
<tr><td colspan="2">GAS COMPOSITION</td><td colspan="2">PURGING :</td><td colspan="2">SHIELDING : 99.995%</td></tr>
<tr><td colspan="2">PREHEATING / INTER PASS</td><td colspan="2">PREHEAT TEMP 10 -100 Deg
INTERPASS : Max 200 Deg</td><td colspan="2">POST HEATING : NA</td></tr>
<tr><td colspan="6">CONTINUITY OF WELDING AND PREHEAT : REFER TO SPECIFICATION</td></tr>
<tr><td colspan="2" rowspan="3">POST WELD HEAT TREATMENT</td><td colspan="2">HOLDING TEMP :</td><td colspan="2">HOLDING TIME :</td></tr>
<tr><td colspan="2">RATE OF HEATING:</td><td colspan="2">MIN. HOLDING TIME :</td></tr>
<tr><td colspan="2">METHOD OF COOLING :</td><td colspan="2">RATE OF COOLING :</td></tr>
<tr><td colspan="6"></td></tr>
<tr><td colspan="2" rowspan="3">MECHANICAL PROPERTY REQUIREMENTS</td><td colspan="2">CHARPY ‘V’ NOTCH VALUE :</td><td>MIN:</td><td>AVERAGE :</td></tr>
<tr><td colspan="2">AT TEMPERATURE :</td><td colspan="2">At 0°C</td></tr>
<tr><td colspan="2">HARDNESS :</td><td colspan="2"></td></tr>
<tr><td colspan="6"></td></tr>
<tr><td colspan="3">CODE OF FABRICATION :</td><td colspan="3">API 1104 / ASME SEC. –IX</td></tr>
<tr><td colspan="6"></td></tr>
<tr><td colspan="6">TECHNICAL NOTES :</td></tr>
</table>

ENERGISING QUALITY	**WELDING SPECIFICATION CHART**	**Specification No. :** **VCS/WSC/02**	**Rev.** **0**

Digitally signed by RACHNA SHUKLA
Date: 2025.03.13 12:53:14 IST

WELDING SPECIFICATION CHARTS TO SPECIFICATION FOR WELDING OF ONSHORE GAS PIPELINES

PIPING CLASS:	**15HLT, 30HLT, 60HLT**			
MATERIAL SPECIFICATIONS	PIPES	ASTM A 333 GR.6 **ASSORTED PIPES**		
	FITTINGS	ASTM A 350 GR.LF2, ASTM A 420 GR.WPL6, ASTM A 420 GR.WPL6-W		
	FLANGES	ASTM A 350 GR.LF2		
	OTHERS	-		
BASE METAL 'P' NO	**1**			
WELDING PROCESS	**GROOVE JOINTS SINGLE SIDE BEVEL**			
	BUTT		**OTHER THAN BUTT**	
	ROOT PASS : **GTAW**	FILLER PASS : **GTAW/SMAW**	ROOT PASS : **GTAW**	FILLER PASS : **SMAW**
	FILLET JOINTS / SOCKET JOINTS : **SMAW**			
WELDING MATERIAL	**GROOVE JOINTS**			
	BUTT		**OTHER THAN BUTT**	
	ROOT PASS : **ER70S-2**	FILLER & CAP PASS **ER70S-2/ E7018-1**	ROOT PASS : **ER70S-2**	FILLER PASS : **ER70S-2/ E7018-1**
	FILLET JOINTS / SOCKET JOINTS : **E7018-1**			
	BACKING RING : N.A.		**CONSUMABLE INSERT : N.A.**	
JOINT PREPARATION	**API 1104 / ASME SEC. –IX**			
GASES	PURGING :		SHIELDING : **Argon**	
GAS COMPOSITION	PURGING :		SHIELDING **: 99.995%**	
PREHEATING	PREHEAT/ **INTERPASS** TEMP: **100^{0}C max**		POST HEATING :	
CONTINUITY OF WELDING AND PREHEAT : REFER TO SPECIFICATION				
POST WELD HEAT TREATMENT	HOLDING TEMP :		HOLDING TIME :	
	RATE OF HEATING:		MIN. HOLDING TIME :	
	METHOD OF COOLING :		RATE OF COOLING :	
MECHANICAL PROPERTY REQUIREMENTS	CHARPY 'V' NOTCH VALUE :		MIN:	AVERAGE :
	AT TEMPERATURE :		At 0°C	
	HARDNESS :			
CODE OF FABRICATION :	**API 1104 / ASME SEC. –IX**			
TECHNICAL NOTES :				

Digitally signed by RACHNA SHUKLA
Date: 2025.03.13 12:53:14 IST

VCS QUALITY SERVICES PVT. LTD.

STANDARD SPECIFICATION
FOR
WARNING MAT

VCS – SS – PP -2020

Rev. No	Date	Prepared By	Checked By	Approved By	Authorized By
04	29.04.2022	RP	MC	HK	GW
03	03.01.2022	SR	MC	HK	HK

UNCONTROLLED COPY	:	If printed
CONTROLLED COPY	:	If in soft and signed

Copyright VCS Quality Services Private Limited – All rights reserved

Digitally signed by RACHNA SHUKLA
Date: 2025.03.13 12:53:14 IST

REVISION RECORD						
Rev.	**Revision Date**	**Prepared by**	**Checked by**	**Approved by**	**Authorized by**	**Revision Description**
00	23.02.2019	PK	DG	AD	SK	Issued as Standard Specification
01	28.01.2020	MB	MC	AD	SK	Document numbering updated from VPC-SS-PL-0034 to VPC-SS-PP-2020
02	18.12.2020	PNS	MC	AD	SK	Re-Issued as Standard Specification
03	03.01.2022	SR	MC	HK	HK	Revised after VCS Internal Technical Review
04	29.04.2022	RP	MC	HK	GW	VCS QMS Integration

Copyright VCS Quality Services Private Limited – All rights reserved

Digitally signed by RACHNA SHUKLA
Date: 2025.03.13 12:53:14 IST

ABBREVIATIONS:

ASME	American Society of Mechanical Engineers
ASTM	American Society of Testing of Materials
API	American Petroleum Institute

Copyright VCS Quality Services Private Limited – All rights reserved

Digitally signed by RACHNA SHUKLA
Date: 2025.03.13 12:53:14 IST

TABLE OF CONTENTS

1.0 SCOPE 5
2.0 REFERENCE CODES, STANDARDS AND SPECIFICATIONS 5
3.0 FEATURES 6
3.1 MATERIAL 6
3.2 MECHANICAL PROPERTIES 6
3.3 COLOUR 6
3.4 DIMENSIONS 6
3.5 MARKING 6
3.6 TESTS 7
4.0 PACKING 8
5.0 QUALITY ASSURANCE (QA) 8
6.0 DEFECT LIABILITY 8
7.0 RECOMMENDED MANUFACTURER FOR RAW MATERIAL 8

Copyright VCS Quality Services Private Limited – All rights reserved

Digitally signed by RACHNA SHUKLA
Date: 2025.03.13 12:53:14 IST

1.0 SCOPE

This specification covers the minimum requirements for the various activities to be performed by for the procurement of Warning Mat.

Warning Mats shall be laid in the ground above the gas main line in order to indicate their presence.

This specification shall be read in conjunction with the condition of all specifications and documents included in the contract between company and contractor.

2.0 REFERENCE CODES, STANDARDS AND SPECIFICATIONS

The latest edition(edition in force at the time of floating enquiry) of following Codes, Standards and regulations are referenced in this specification and all provisions of these reference codes and standards shall be applicable.

AMERICAN SOCIETY OF MECHANICAL ENGINEERS (ASME)

B31.4	:	Pipeline Transportation system for liquid Hydrocarbon & other liquids.
B 31.8	:	Gas Transmission and Distribution Piping Systems.

AMERICAN PETROLEUM INSTITUTE (API)

1102	:	Pipeline Crossing Railroads and Highways
1109	:	Marking Liquid Petroleum Pipeline Facilities
1104	:	Welding of Pipelines and Related Facilities

PNGRB REGULATIONS :

G.S.R 808(E) T4S : Regulations for Natural Gas Pipelines

G.S.R. 612(E) T4S : Regulations for CGD Network

US DOT PIPE LINE SAFETY STANDARD

Part 192, Title 49	:	Transportation of Natural and other Gases by Pipe Line
Part 195	:	Transportation of Liquid by Pipe Line

Copyright VCS Quality Services Private Limited – All rights reserved

Digitally signed by RACHNA SHUKLA
Date: 2025.03.13 12:53:14 IST

3.0 FEATURES

Warning mat material shall be non-biodegradable type. It shall have non-toxic & anti-rodent properties.

3.1 MATERIAL

Warning Tape, Type 1 as per EN 12613 shall be used for the present project.

The material grade of Warning Mat shall be High density polyethylene (PE)/ PP material with warning sticker / stamp. The material shall be having the density between 0.913 to 0.923 g/cc at 27 deg. Celsius as per IS 2508.

The tape shall be uniform in colour, texture and finish and shall be free from holes and foreign materials.

Rodent repellent chemicals to be added to the plastic master batch for protection against rodents.

The material and colour, if used, for printing shall have no detrimental effects on the environment.

3.2 MECHANICAL PROPERTIES

Mechanical properties of the Warning Mat (Type I) shall be in accordance with the code EN 12613.

Minimum tensile withstand load in longitudinal direction shall not be less than 200 N. The test piece shall not exhibit a reduction of more than 20% of its width after removal of the specified load.

3.3 COLOUR

The Warning Mat shall be of bright golden yellow colour. This colour must not take any alteration in the course of time.

3.4 DIMENSIONS

Warning Mat shall have following dimensions:

Width	(D+500) ± 2 mm (Note-1)
Thickness	1.0 mm (Minimum)

'D' is diameter of mainline pipe.

Negative tolerance on the thickness is not allowed.

Note: Width of Mat shall be finalized during drawing approval stage.

3.5 MARKING

3.5.1 The warning mat shall be marked at intervals not exceeding 1 meter. Marking on the mat shall be approved by owner. The marking shall be legible and durable. The

Copyright VCS Quality Services Private Limited – All rights reserved

Digitally signed by RACHNA SHUKLA
Date: 2025.03.13 12:53:14 IST

warning mat must be printed with "Caution: High Pressure Gas Pipeline Below" in English and Hindi/ Local Language, Chainage marking along with owner's logo and owner's 24 Hours Emergency Number ----------, ---------- at a frequency of every meter. In addition, name or trademark of the manufacturer, year of manufacture and reference of code of manufacture of warning mat shall be included in the marking.

3.5.2 Vendor shall submit proposed Artwork to be marked on the Warning Mat for approval from Owner / Owner's representative before start of production.

3.6 TESTS

All the tests and test procedures for Warning Mats shall be as per EN 12613 or as per required National/ International standards mentioned in EN 12613. In addition, all requirements pertaining to statutory requirements, if any, as specified from time to time shall be complied.

The required tests are briefed as below:

Colouring

Three separate tests shall be carried out in accordance with:

- As per normative annexure B of EN 12613, using 20% ammonium sulphide.
- As per EN ISO 175, using 10% nitric acid & 20% sodium carbonate solution.

The tests shall be repeated for each colour (if any).

There shall be no discolouration or change of the initial colour of the warning tape after the tests.

Tensile Withstand Strength

The test sample shall be selected as per mentioned in EN 12613. The test samples shall be preconditioned for not less than 12 h at 23±2 °C. Static loads shall be carried out to the samples over a period of 10 s.

After the test, the test piece shall withstand without starting to separate at weak points (if any) for not less than 5 minutes. Also it should not exhibit a reduction of more than 20% of its width after removal of specified load.

The minimum tensile withstand load for the warning mat in the longitudinal direction shall be not less than 200 N.

Visual Warning Characteristics

The test shall be carried out in accordance with normative annexure A of EN 12613.

Permanence of Printing

The test shall be performed as per CL. 9.3 of IEC 60898:1995.

Copyright VCS Quality Services Private Limited – All rights reserved

Digitally signed by RACHNA SHUKLA
Date: 2025.03.13 12:53:14 IST

The test is made by rubbing the marking by hand for 15 sec with a piece of cotton soaked with water and again for 15 sec with a piece of cotton soaked with aliphatic solvent hexane with a content of aromatics of max. 0.1% by volume, a kauributanol value of 29, an initial boiling point value of approx. 65°C, a dry point of approx. 69°C and a density of approx. 0.68 gm/cm^3.

After the test, the marking shall be easily legible.

Test of laying Characteristics

The test is for the assessment of transverse rigidity of the warning mats.

The test shall be performed as per EN 12613.

Warning Mat Virginity Test

Differential Scanning Calorimeter (DSC) Scan test along with the temperature of melting (Tm) shall be performed for the Warning Mat and its raw polymer i.e. virgin low density polyethylene (LDPE).

The Differential Scanning Calorimeter (DSC) Scan curve of the Warning Mat obtained from its DSC Scan test along with its Temperature of Melting (Tm) shall then be compared with the DSC Scan curve and the Temperature of Melting (Tm) of its raw polymer (i.e. virgin LDPE).

To ensure the virginity of the Warning mat, the DSC Scan curve and Tm of the Warning Mat (finished product manufactured from the raw polymer) shall match on overlapping with its corresponding raw polymer's DSC Scan curve and Tm.

4.0 PACKING

The warning mat shall be delivered in rolls of minimum 50 meters. Packing size to be mentioned to ensure uniformity in delivery conditions of the materials being procured. Packaging of the Warning Mat shall be such that there won't be any deterioration due to Ultraviolet (UV) effect during transportation and storage of the Warning Taps prior to use.

5.0 QUALITY ASSURANCE (QA)

Manufacturer shall prepare detailed Inspection Test Procedure (ITP) and submit for the approval from Owner / Owner's representative.

6.0 DEFECT LIABILITY

Defect liability period shall be as Specified in Tender.

7.0 RECOMMENDED MANUFACTURER FOR RAW MATERIAL

1. INEOS
2. BOREALIS
3. TOTAL PETROCHEMICALS
4. DOW
5. BASELL

Copyright VCS Quality Services Private Limited – All rights reserved

Digitally signed by RACHNA SHUKLA
Date: 2025.03.13 12:53:14 IST

6. RELIANCE
7. GAIL
8. HALDIA

However, any other reputed national or international Manufacturer may also be considered for supply of Raw material with approval of Owner / Owner's representative.

Copyright VCS Quality Services Private Limited – All rights reserved

Digitally signed by RACHNA SHUKLA
Date: 2025.03.13 12:53:14 IST

VCS QUALITY SERVICES PVT. LTD.

STANDARD SPECIFICATION
FOR
PRE-COMMISSIONING
& COMMISSIONING OF PIPELINE SYSTEM

VCS – SS – PP - 2022

Rev. No	Date	Prepared By	Checked By	Approved By	Authorized By
03	29.04.2022	RP	MC	HK	GW
02	21.12.2020	MB	MC	AD	SK

UNCONTROLLED COPY	:	If printed
CONTROLLED COPY	:	If in soft and signed

Copyright VCS Quality Services Private Limited – All rights reserved

Digitally signed by RACHNA SHUKLA
Date: 2025.03.13 12:53:14 IST

REVISION RECORD

Rev.	Revision Date	Prepared by	Checked by	Approved by	Authorized by	Revision Description
00	04.06.2019					Issued as Standard
		JV	MD	AD	SK	
01	28.01.2020					Document numbering updated from VPC-SS-PL-0039 to VPC-SS-PP-2022
		MB	MC	AD	SK	
02	21.12.2020					Re-Issued as Standard
		MB	MC	AD	SK	
03	29.04.2022					VCS QMS Integration
		RP	MC	HK	GW	

Copyright VCS Quaity Services Private Limited – All rights reserved

Digitally signed by RACHNA SHUKLA
Date: 2025.03.13 12:53:14 IST

ABBREVIATIONS:

NACE	National Association of Corrosion Engineers
ASME	American Society of Mechanical Engineers
ASTM	American Society of Testing of Materials
BHN	Brinell hardness number
MSS-SP	Manufacturers Standardization Society - Standard Practice
LTCS	Low temperature Carbon Steel AS Alloy Steel

Copyright VCS Quaity Services Private Limited – All rights reserved

Digitally signed by RACHNA SHUKLA
Date: 2025.03.13 12:53:14 IST

CONTENTS

1.0 SCOPE 5
2.0 GENERAL 5
3.0 RESPONSIBILITY OF CONTRACTOR 5
4.0 DOCUMENTATION 17
5.0 SPARES AND CONSUMABLES 18
6.0 SAFETY 18
7.0 OTHERS 18

Copyright VCS Quaity Services Private Limited – All rights reserved

Digitally signed by RACHNA SHUKLA
Date: 2025.03.13 12:53:14 IST

1.0 SCOPE

The specification covers the minimum technical requirements for testing and commissioning of entire pipeline facilities including Commissioning activities such as pre-commissioning checks, dewatering, swabbing, flushing/blowing, leak testing etc.

2.0 GENERAL

The scope of work for testing & commissioning including Pre – Commissioning actives shall include but not limited to the manpower, machinery & equipments, detailed Procedures, Materials & Consumable, Communications etc. to perform the work satisfactorily.

Contractor shall prepare detailed procedures for piping, dewatering, swabbing, pigging & commissioning of the pipeline, covering all aspects of work for owner's approval.

Contractors shall design & supply all temporary line connections Valves, Instruments, as required during the various operations.

In the event of any details which are not fully addressed, it is warranted by Contractor that work shall be performed in accordance with the specification & the best recognized practices in the onshore pipeline industry.

3.0 RESPONSIBILITY OF CONTRACTOR

The pipeline contractor shall be responsible for all the pre-commissioning and commissioning activities that need to be carried out for the project.

3.1 Pre-commissioning

In order to execute and perform pre-commissioning activities, the pipeline contractor shall be responsible for (but not limited to) the following: -

- Carrying out pre-commissioning checks of the pipeline system including Tap-off Stations/Receipt Stations, Sectionalizing Valve (SV) Stations and their associated facilities under the scope of work to ascertain that the project has been mechanically completed in all respects.
- Checking of field instruments, laying out survey of pipeline, checking of communication system, checking of Electrical, Instrumentation system, controls & interlock etc.
- Dewatering of Pipeline and above ground piping, flushing/air-blowing and leak testing of piping i.e. piping and equipments under their scope of work.
- Supply and supervision of manpower for pre-commissioning.
- Operation of machinery and equipment for pre-commissioning.
- Supply and use of materials/consumables as required for the pre-commissioning activities.

Copyright VCS Quaity Services Private Limited – All rights reserved

Digitally signed by RACHNA SHUKLA
Date: 2025.03.13 12:53:14 IST

- Erection of all temporary facilities like pig launcher/receiver, line connections, spool pieces, pigs and requisite accessories, valves, instruments, manpower etc. as required during various operations.
- Preparation of detailed pre-commissioning procedures, activity schedules, bar charts, schemes etc.

  This shall include preparation of detailed procedures for dewatering, electronic geometric pigging / caliper pigging (By other Contractor), idle time preservation (if applicable), removal of idle time preservers (if applicable, flushing/blowing, leak testing and shall address the sequence and methodology describing all operations, data on materials, equipments, instruments, consumables (e.g. Pigs and associated items), communication systems, necessary calculations, detailed time schedule and organization chart.
- All necessary work to perform the job successfully including all modifications that would be required at various stages.

The pipeline contractor shall demonstrate to the Owner / Consultant (for approval) the successful completion of all the above-mentioned activities.

In the event of any detail, which is not fully addressed, the pipeline contractor should warrant that work shall be performed in accordance with the relevant codes, Owner / Consultant's specifications and the best recognized engineering guidelines and practices being followed in the on-shore gas pipeline industry.

3.2 Commissioning

In order to execute and perform commissioning related activities, the pipeline contractor shall be responsible for providing all support/ assistance required for commissioning under the overall guidance and supervision of Owner / Consultant. Contractor shall submit a detailed commissioning procedure for Owner / Consultant approval.

The pipeline contractor shall be also responsible to coordinate with the Composite Contractor(s), who is responsible for commissioning of the cathodic protection of the entire pipeline so that the commissioning process can proceed uninterruptedly in a harmonious manner for the entire project.

Commissioning assistance broadly covers the following activities:

- Commissioning checks including Safety Review prior to start of commissioning activities to achieve 'Ready for commissioning' status for pipeline
- Surveillance of pipeline and attending leaks and operation of SVs and metering station (at Dispatch Station/Tap-Off Station/Receipt Stations, IDS whenever required).
- Supply and supervision of manpower for commissioning. Manning of SV and Tap-Off Station/Receipt Stations for pig tracking, pig receiving and other activities.
- Supply and operation of machinery and equipment for commissioning, if required.
- Supply of Nitrogen and its associated accessories for purging required for carrying out commissioning.
- Supply and use of materials/consumables as required for the commissioning activities.

Copyright VCS Quaity Services Private Limited – All rights reserved

Digitally signed by RACHNA SHUKLA
Date: 2025.03.13 12:53:14 IST

- Any other assistance required by Owner / Consultant.
- Erection and supply of all temporary line connections, spool pieces, strainers, valves, instruments, manpower etc. as required during various operations.
- Ensuring all communication facilities is in place and in proper working condition prior to start of commissioning activities of the pipeline system.
- Stabilization and total system operation for 72 hrs. with all instruments controls & interlocks working satisfactorily at normal operating conditions. On completion of this stage one-month operating run period will start.
- All necessary work to perform the job successfully including all modifications that would be required.

In the event of any detail, which is not fully addressed, contractor should warrant that work should be performed in accordance with the relevant codes, Owner's specifications and the best recognized engineering guidelines and practices being followed in the onshore pipeline industry.

3.3 Pre-commissioning Activities

3.3.1 PRE-COMMISSIONING CHECKS

Pre-commissioning checks shall be carried out for the pipeline system to ascertain that the pipeline system has been mechanically completed in all respect. These checks shall cover all the facilities of the main pipeline, including Metering Stations, tap-Off Stations, Receipt Stations, Sectionalizing Valve Stations, as applicable. The pre-commissioning checks shall include the following:

a) System Checks

The entire facilities shall be checked against the latest P&ID's, Engineering and Vendor Drawings/Documents and other design specifications. Any shortcoming observed shall be listed down in the form of punch lists and these should be duly attended or liquidated. The pipeline contractor should check the stations systems from the angle of pre-commissioning and commissioning and spell out any additional requirement of vents/drains, temporary arrangement/modification etc. that may be required during the pre-commissioning and commissioning activities and arrange for the same in consultation with the Owner / Consultant representative.

b) Checking of Field Instrument

All the field instruments like actuated valves, shutdown valves, transmitters, solenoid valves, shut down switches, alarms etc. shall be checked physically and also for their intended application by simulating the actual conditions. It will also include checking of different meters, gauges, action of actuated valves, control valves, shutdown valves etc.

c) Survey of the Pipelines

This shall be performed to confirm that proper fittings/ supports, Cathodic protection system, route markers, warning signs, fencing around SV stations, etc. have been installed along the pipeline.

Copyright VCS Quaity Services Private Limited – All rights reserved

Digitally signed by RACHNA SHUKLA
Date: 2025.03.13 12:53:14 IST

d) Checking of Communication System

This is to check that there is proper communication with adequate back-up power to ensure uninterrupted communication.

e) Checking of Electrical Distribution System

This is to ensure safety and also to ensure an uninterrupted power supply during start-up and normal pipeline operation.

f) Checking of Instrument, controls & Interlocks

This is to check that instrument controls and interlocks are functional as per the normal operating conditions.

g) Checking of Utilities

This is to check that utilities like power system, etc. are available prior to start-up.

h) Any other checks as may be considered necessary.

3.3.2 PRE-COMMISSIONING WORKS FOR THE ABOVE GROUND PIPING/ UG PIPELINE (DISPATCH STATION, METERING STATIONS, RECEIPT STATIONS ETC. UNDER THE SCOPE OF WORK)

3.3.2.1 Dewatering (Hydro Test Water)

- General

  Dewatering of a piping system shall be done subsequent to the hydro-test of the respective piping section. During the dewatering operation, the major quantity (to the maximum extent possible) of hydro-test water shall be removed from the main interconnecting piping work in the stations. A standard blind shall be arranged and provided at the inlet and outlet nozzles of pumps and sump tank to avoid entry of debris/dirt/mud etc., before start-up of pre-commissioning activities.

- Operational Requirements

  The dewatering operation of the piping work in the stations shall consist of physically draining the water content in the piping work by opening low point drains and/or end flanges. If required, air shall be used to push-off water from the pipes. The pipeline contractor shall arrange suitable compressor for such purposes.

- Flushing/Blowing of Aboveground Piping in the Terminal

  Flushing/blowing of the above ground piping with water/air to remove debris/dirt/mud from within the piping has to be performed by the pipeline contractor. Subsequent to water flushing, to ensure complete cleanliness of the piping work, air blowing/cardboard blasting method has to be adopted. All instruments, control valves, orifice plates etc. to be dismantled from the piping work and any gap produced should be bridged with suitable temporary spool. Proper supporting of the piping, during such flushing/blowing activities is to be ensured by the pipeline contractor.

Copyright VCS Quaity Services Private Limited – All rights reserved

Digitally signed by RACHNA SHUKLA
Date: 2025.03.13 12:53:14 IST

The pipeline contractor has to make arrangement of clean water/air for these flushing / blowing activities.

The pipeline contractor should submit a plan/methodology for carrying out such activities detailing out each aspect/step.

- Acceptance Criteria

The pipeline contractor shall specify when flushing/air blowing is completed to the satisfaction of the Owner/Consultant, and shall obtain approval of the Owner/Consultant before proceeding to the next step.

Pipeline

The pipeline contractor has to dewater the pipeline section after hydrotest. After dewatering, swabbing shall be done.

The pipeline contractor should submit a plan/methodology for carrying out such activities detailing out each aspect/ step for review & Approval of Client /EIC/PMC.

The disposal of the water shall be performed such a way that no harm is done to the environment and animals and the Dewatering procedure should indicate this disposal methodology.

3.3.2.2 Swabbing

The swabbing operation, which shall be done subsequent to the dewatering operation, is meant to reduce the remaining water in the pipeline to acceptable condition and to ensure removal of free water left inside the pipeline prior to final drying/ purging and commissioning of the Pipeline system. This is done by driving number of foam pigs propelled by oil free compressed dry air, which can pick up free water in the pipeline.

- Acceptance Criteria

It is recommended that before foam pig run, number of batch pig run shall be done to minimize free water in the pipeline section. Then only foam pig run shall be started. Dewatering is considered as complete, when foam pig received is in touch dry condition & same is subjected approval of Client /EIC/PMC.

Dewatering & Swabbing procedure shall be submitted for review & approval of Client /EIC/PMC.

Contractor shall obtain approval of the Owner/ Consultant before proceeding to the next step.

3.3.2.3 Drying

The pipeline system including the underground pipeline and the above ground piping at dispatch and receipt stations, SV stations, all Terminal station, CGS/ PRS stations and hook-up / tap-of points needs to be dried prior to charging natural gas if specified in bid. Drying is required to prevent internal corrosion of the pipeline & to meet the supply specification and also as a means of preservation of the pipeline sections subsequent to the pre-commissioning activities. The pipeline shall be dried by using super dry air / vacuum method or by any other suitable method.

Copyright VCS Quaity Services Private Limited – All rights reserved

Digitally signed by RACHNA SHUKLA
Date: 2025.03.13 12:53:14 IST

Contractor shall submit the detailed procedure and the duration of the drying operation and obtain Company's approval on the same prior to start of the drying operation.

Commissioning contractor shall assess any requirement of swabbing for entire pipeline to reduce the time for drying and shall carryout such activity.

- Acceptance Criteria

  Contractor shall ensure that drying operation is complete before proceeding to the next step of inertization/ purging. The drying of the pipeline system shall be considered to be achieved on attaining a water dew point of -8°C at atmospheric pressure and this water dew point in pipeline shall be continuously maintained till inertisation or commissioning of the pipeline.

3.3.2.4 Internal Cleaning of Equipment

- General

  Equipment's like filters, Corrosion Inhibitor Dosing Tanks, Sump Tanks are to be checked for internal cleanliness and shall be ensured by the pipeline contractor.

- Acceptance Criteria

  The laying contractor has to demonstrate cleanliness of the internals of all equipment to the satisfaction of the Owner/Consultant and obtain approval for final box up of the equipment.

3.3.2.5 After dewatering / swabbing is over & all functional checks carried out as specified in pre-commissioning checks, drying of the pipeline is to be closed out with compressed air. The pipeline shall be dried to achieve a content dew point of -8 Deg C.

3.3.2.4 Trial Run of Rotating Equipments

The pipeline contractor has to arrange for trial run of the sump pump with water for short duration of time.

The pipeline contractor has to arrange all temporary arrangements required for such trial runs. The pipeline contractor has to submit procedure/method statement regarding how he plans to take such trial runs and take approval of the Owner/Consultant, before actually proceeding for the same. If pump vendor(s) is available for such trial run, the pipeline contractor has to provide all sorts of assistance to the vendor and help the vendor in completing the successful trial run.

3.4 Commissioning Related Activities

3.4.1 Safety Review Prior to Start of Commissioning Activities

A pre-start-up safety review of the cross-country pipeline system shall be arranged by the pipeline contractor, involving all concerned in the commissioning. The Owner/Consultant shall also participate in the pre-start-up safety review. The pipeline contractor shall generate all requisite formats to record the findings of such Safety Review.

Copyright VCS Quaity Services Private Limited – All rights reserved

Digitally signed by RACHNA SHUKLA
Date: 2025.03.13 12:53:14 IST

3.4.2 Ready for Commissioning

After completion of pre-commissioning activities and Owner approved safety start-up review followed by liquidation of review punch list points, the pipeline contractor shall notify the Owner/Consultant that the pipeline systems in totality are ready in all respects for hydrocarbon-in. 'Ready for commissioning status' shall be jointly assessed by Owner/Consultant, composite work contractor, Pipeline contractor. After such joint assessment, if all the criteria are met, it will then be declared by the Owner that the entire pipeline system has reached a stage of 'Ready for Commissioning'.

Inertization/ Purging

Contractor shall carry out Inertization/ Purging of the entire pipeline system including the underground pipeline and the above ground piping at dispatch and receipt stations, SV stations, IP stations and hook-up / tap-of points).

Operational requirements:

During the Inertization/ Purging operation, the dry air left in all the pipeline shall be replaced by dry nitrogen before filling the natural gas into the pipeline for safe commissioning. Depending on the commissioning plan/ strategy, sections of the pipeline system may be taken up for commissioning in steps. One of the suggested methods for Inertization/ Purging of the underground pipeline is by the usage of nitrogen slugs separated by pigs. Depending on the length of the pipeline portion to be taken up for commissioning, the amount of the nitrogen use may vary. In general, the total volume of the nitrogen slug train must be at least 10% (by volume) of the total length of the pipeline under consideration. The last pig in the pig train shall be propelled by natural gas (during commissioning stage of the pipeline).

For above ground piping at dispatch and receipt stations, SV stations, IP stations and hook-up / tap-of points, the piping shall be purged with nitrogen

Nitrogen required for Inertization/ purging purpose of the pipeline and aboveground piping shall be supplied by the contractor and should be of purity level 99.9% or above. Nitrogen gas at ambient temperatures (AND NOT LIQUID NITROGEN) and in completely vaporized and gaseous state shall be used as the Energizing medium. In case, the source of gaseous nitrogen is from liquid nitrogen tankers, then all precautions (including verification of the lowest tolerable temperature of all components in the system under commissioning) should be ensured. All temporary connections required for nitrogen purging shall be done by contractor.

The contractor shall submit the detailed procedure (in line with the above suggested method or any other acceptable one) and the duration of the Inertization/ Purging operation and obtain approval of the company before starting the operation. Inertization/ Purging shall be followed immediately by charging of pipeline by natural gas.

- Acceptance Criteria

Inertization of the entire pipeline may be accepted to be complete when the required quantity of nitrogen has been introduced into the pipeline. The contractor has to ensure this condition for safe commissioning of the pipeline. For above ground piping at dispatch and receipt stations, SV stations, IP stations and hook-up / tap- of points, the inertization

Copyright VCS Quaity Services Private Limited – All rights reserved

Digitally signed by RACHNA SHUKLA
Date: 2025.03.13 12:53:14 IST

may be accepted to be complete when the residual oxygen content in the piping is below 1% (vol/vol).

3.4.3 Commissioning and Pressure Stabilization

The pipeline contractor shall be responsible for providing all necessary assistance to carry out commissioning activities under the overall guidance and supervision of Owner/Consultant for the entire pipeline system.

Pipeline shall be commissioned and stabilized in 2 phase, i.e. up to 5 kg/cm2 g pressure and then up to operation pressure. Pipeline shall be kept for 24 hours after Ist phase for pressure stabilization.

Low Pressure leak check for aboveground piping

- General

The aboveground piping sections of the pipeline system shall be checked for leaks at flange points of piping and equipment, instrument impulse tubing points etc. This shall be done by pressurizing the system piping / equipment with dry compressed air (for this purpose, oil free air compressors shall be used) and testing the system by means of soap solution for leaks.

The contractor shall submit the detailed procedure and the duration of the leak check operations and obtain approval of the company before starting the operation.

- Acceptance Criteria

The leak check operation shall be considered to be completed when the piping system / equipment is free of leaks, after equipment pressure stabilization. This shall be subject to Company's approval.

Commissioning of pipeline shall be considered completed when the line is charged with product natural gas at operating pressure and the total system operated at normal operating pressure for a minimum period of 72 hrs. with all the instruments, controls & interlock satisfactorily at normal operating conditions. Contractor shall submit a detailed commissioning procedure for owner's approval.

3.5 Commissioning Check List

Check list to be filled up for commissioning approval of the pipeline:

S. NO.	GENERAL INFORMATION	OBSERVATION/ COMMENTS		
		CONTRACTOR	CONSULTANT	CLIENT
a. GENERAL				
1	a) Name of the Pipeline: b) Services (NG) c) Design/ OISD code followed: d) Design capacity: e) Length of the Pipeline in kms:			

Copyright VCS Quaity Services Private Limited – All rights reserved

Digitally signed by RACHNA SHUKLA
Date: 2025.03.13 12:53:14 IST

	f) Size - Outside Dia. / Wall Thickness / Grade of Pipeline: g) Is the pipeline designed for scrapper / intelligent pigging? h) No. & location of isolation Valve(s) with chainages: (i) Hand Operated valves (ii) Remote Operated valves i) No. of water bodies crossings with Chainages: (i) Name of River (ii) Pond / Lake crossings (iii) Canal crossings (iv) Marshy land / creek j) No. of cased crossings Railway k) No of Road crossings (NH & SH) i) Cased ii) Non cased			
b. CROSS COUNTRY PIPELINE DETAILS				
1	Design pressure of the pipeline (In Kg/Cm2).			
2	Maximum allowable operating pressure of the pipeline, and normal Operating Pressure (In Kg/Cm2).			
3	Corrosion allowance for the pipeline. (In mm)			
4	Whether the pipeline has been hydrostatically tested. (i) Hydrotest Pressure (In Kg/Cm2) (ii) Period of Hold			
5	Type of Sectionalizing Valves used on the pipeline.			
6	Whether the pigging facility has been installed and the pipeline is piggable by scraper pig.			

Copyright VCS Quaity Services Private Limited – All rights reserved

Digitally signed by RACHNA SHUKLA
Date: 2025.03.13 12:53:14 IST

7	Whether the gauging pig was passed through the pipeline to prove its internal diameter and was it satisfactory.			
8	Whether EGP was carried out for the pipeline. Details to be provided.			
9	Whether the pipeline has been cleaned and swabbed.			
10	Whether adequate product is available for commissioning.			
11	Whether mechanical completion report for the pipeline is available.			
12	Whether ROU restoration completed.			
13	Whether following approvals have been obtained for pipeline before construction? - PESO (CCOE) approval for laying of pipeline/ construction of facilities. - State Pollution Control Board consent to establishment. - Registration of establishment from Central/ State Govt. labour commissioner under Contract Labour (Regulation and Abolition) Act'1970. - Permission from Irrigation/ PWD authority/ NHA etc.			
14	Whether following Clearances obtained before Commissioning? - Commissioning clearances from PESO (CCOE). - CCOE License as required. - Consent for operation from state pollution control board for Air and Water. - Factory License as required.			
15	Whether pre-tested Insurance Stock pipes earmarked and kept separately.			
COATING AND CATHODIC PROTECTION DETAILS				

Copyright VCS Quaity Services Private Limited – All rights reserved

Digitally signed by RACHNA SHUKLA
Date: 2025.03.13 12:53:14 IST

1	Type of External Coating used in the Pipeline (CTE/ 3LPE/ FBE/ Other) Coating (Thickness in mm).			
2	Whether the pipeline is adequately protected catholically: Presently protected by TCP. Expected date of Commencing of PCP.			
3	Post Construction Coating Survey carried out or not?			
4	Whether Interference survey for the pipeline has been carried out carried out and mitigation measures taken.			
5	Whether electrical Surge diverter provided across IJs?			
6	Whether corrosion coupons have been installed for internal corrosion monitoring.			
7	Whether all cased crossings have been checked and are free from any electrical shorting.			
8	Whether Natural PSP of the Pipeline has been taken?			
c. STATION PIPING				
1	Whether station piping has been provided as per the latest approved P&IDs.			
2	Whether mechanical completion certificate for the station is issued			
3	Whether all the flange connections have been checked for tightness and length of bolts are adequate. **All short bolting have been checked?**			
4	Whether flow direction has been marked on station piping and equipment.			
5	Whether proper direction for check valves and flow meters has been ensured.			

Copyright VCS Quaity Services Private Limited – All rights reserved

Digitally signed by RACHNA SHUKLA
Date: 2025.03.13 12:53:14 IST

6	Whether adequate crossovers for crossing and platforms to operate valves have been provided **with safety hand rails?**			
7	Whether access to all operating equipment's including vessels, valves, sump pump, scraper barrel is adequate.			
8	Whether CI dosing facilities with adequate stock is available for dosing in water and product.			
9	Whether proper arrangement has been made for drainage and disposal of the water during commissioning.			
10	Whether alignment of motor with main pump/ compressor and suction/ discharge piping is done and acceptable to the vendor/ owner.			
11	***MOVs which are on remote operation have been functionally tested for opening and closing operation?***			
12	***Whether Vent lines have been provided as per code/ standard/ specifications.***			
MISCELLANEOUS				
1	Power System Details: i) Transformer Rating & Type ii) HT Breaker Type & Rating iii) DG Set's Details			
2	Communication system details: i) Telephones ii) PA/Paging iii) VHF iv) Walkie/ Talkie v) Hot Line vi) VCS vii) CCTV			

Copyright VCS Quaity Services Private Limited – All rights reserved

Digitally signed by RACHNA SHUKLA
Date: 2025.03.13 12:53:14 IST

3	Whether firefighting equipment are provided as per code/ standard/ specifications.			
4	Whether list of contact persons has been displayed with telephone nos.			
5	Check availability of Visitor/ attendance Registers at the gate.			
STATUTORY APPROVALS				
1	Whether following approvals have been obtained for construction. - PESO (CCOE) approval for construction of facilities (Ref no. and Date). - Environmental clearance for the project (No. & date) - Pollution control.			
2	Whether following licenses/ approvals are available before commissioning: - CCOE License No., date, validity. - Is there any change with respect to approved CCOE layout? - NOC from District Magistrate/ District Collector in case CCOE License is not applicable - Govt. Notification for protected area declaration - Clearance from CEA/ State Electrical Inspectorate. - DG Set Installation approval - Any other applicable statutory license/ approval			

4.0 DOCUMENTATION

The pipeline contractor shall submit the complete description, detailed procedures and time schedule for all of the following activities for approval of the Owner/Consultant.

Copyright VCS Quaity Services Private Limited – All rights reserved

Digitally signed by RACHNA SHUKLA
Date: 2025.03.13 12:53:14 IST

- Pre-commissioning Checks
- Dewatering
- Swabbing
- Flushing / Blowing
- Low Pressure Leak Test with Air
- Drying
- Idle Time Preservation (if applicable), including Removal of Preservers

All these documents should be prepared covering all aspects of HSE, quality assurance and quality control plans.

The pipeline contractor shall ensure that his documents are related to "as-built" conditions of the pipeline, equipment and structures involved.

Documents shall also contain all safety plans, procedures to be followed while carrying out the activities.

Upon successful completion of the work, the pipeline contractor shall prepare a final report of the work which shall include necessary charts, diagrams, graphs, calculations, recordings, daily logs, measurements, details of the operation etc. Report shall also include all certificates of calibration of instruments required, together with records of calibration performed at site prior to the start of any operation and the approved pre-commissioning and commissioning formats and check sheets.

5.0 SPARES AND CONSUMABLES

The pipeline contractor shall identify and arrange for supply of manpower, spares, tools, tackles and consumables as required for pre-commissioning and commissioning activities.

6.0 SAFETY

The pipeline contractor shall follow the safety practices during execution of pre-commissioning and commissioning works as detailed in the scope of work. The pipeline contractor shall also maintain and follow all safety practices equivalent or better than those being practiced by the industry during pre-commissioning and commissioning activities. A dedicated safety department from the pipeline contractor's side should be available for the job.

7.0 OTHERS

The pipeline contractor, along with his bid documents, is required to submit the following:

- Execution plan and method statement for pre-commissioning and commissioning activities.

Copyright VCS Quaity Services Private Limited – All rights reserved

Digitally signed by RACHNA SHUKLA
Date: 2025.03.13 12:53:14 IST

- Past experience of pre-commissioning and commissioning activities carried out for a similar pipeline system / network.

Copyright VCS Quaity Services Private Limited – All rights reserved

Digitally signed by RACHNA SHUKLA
Date: 2025.03.13 12:53:14 IST

VCS QUALITY SERVICES PVT. LTD.

STANDARD SPECIFICATION
FOR
MAGNETIC CLEANING AND ELECTRONIC GEOMETRY PIGGING

VCS-SS-PP-2026

Rev. No	Date	Prepared By	Checked By	Approved By	Authorized By
02	29.04.2022	RP	MC	HK	GW
01	05.01.2022	SR	MC	HK	HK

UNCONTROLLED COPY	:	If printed
CONTROLLED COPY	:	If in soft and signed

Copyright VCS Quality Services Private Limited – All rights reserved

Digitally signed by RACHNA SHUKLA
Date: 2025.03.13 12:53:14 IST

REVISION RECORD						
Rev.	**Revision Date**	**Prepared by**	**Checked by**	**Approved by**	**Authorized by**	**Revision Description**
00	28.01.2020					Revised
		MB	MC	AD	SK	
01	05.01.2022					Revised as Marked
		SR	MC	HK	HK	
02	29.04.2022					VCS QMS Integration
		RP	MC	HK	GW	

Copyright VCS Quality Services Private Limited – All rights reserved

Digitally signed by RACHNA SHUKLA
Date: 2025.03.13 12:53:14 IST

SCOPE OF WORK AND TECHNICAL SPECIFICATIONS

PART I: SCOPE OF WORK

1.0 OBJECTIVE

The objective of the this post hydrotest EGP survey is to clean "constructional metallic debris" of the pipeline and obtain the record of internal geometry in "As laid" condition of the pipeline. It is therefore required to run the magnetic cleaning pig and Electronic Geometry Pig so as to identify, characterize (Sizing and Location), and evaluate any geometrical injurious defects that might have got introduced during installation and hydrotesting of pipeline.

2.0 SCOPE OF WORK

Essentially the Scope of Work comprises of running the Magnetic Cleaning Pig and Electronic Geometry Pig through each segment of the pipeline. Pipeline laying contractor shall carry out the cleaning and plate gauging operation to the satisfaction of EGP Contractor.

All facilities /services numerated below (not limited to) which the CONTRACTOR deems necessary to fulfil the WORK shall have to be arranged by laying contractor at no extra cost and time to the COMPANY.

2.1 **Activities**:

(a) Mobilization of all equipment e.g. Magnet cleaning pigs, Electronic Geometry pigs, pig locating and pig tracking devices, spares, consumables, Communication system, transportation and personnel. It is expressly understood that this does not limit the scope of work of the CONTRACTOR in any way. The quantities to be mobilized for different equipment (different types of pigs, pig tracking device) accessories, spares, and consumables need to be carefully evaluated by the bidder taking in to the consideration that Cleaning and Geometry inspection should be carried out without any constraint. CONTRACTOR is to mobilize all types of required pigs, accessories, spares, pig locating and tracking devices, in adequate number for completion of entire works within the contract price without depending turnaround time of bringing the pig received from previous run from receive station to launch station. As such no turn around period

Copyright VCS Quality Services Private Limited – All rights reserved

Digitally signed by RACHNA SHUKLA
Date: 2025.03.13 12:53:14 IST

shall be allowed. Contractor shall submit operation manual/procedure manual and data sheets for pigs before commencing the job for OWNER/CONSULTANT approval.

(b) Carrying out adequate number of Magnet cleaning pig runs by running suitable Magnet cleaning pigs in pipeline/ pipeline segment covered under SCOPE OF WORK including pig tracking till such time CONTRACTOR is satisfied with himself about the degree of cleanliness of pipeline/Pipeline Segment and provide detailed daily site report for each run in the approved format before commencing the subsequent run.

However, the constructional ferrous debris permitted with magnetic cleaning pig shall not exceed 3 Kg/100KM. In case debris received is more than this amount, the contractor shall be required to make subsequent run(s) until at least the above limit is achieved.

(c) CONTRACTOR to carry out adequate number of electronic geometry (Electronic Geometry) pig runs in each pipeline segment covered under SCOPE OF WORK including pig tracking for each pipeline segment to generate valid and interpretable geometry data of the pipeline and analysis of data of the Electronic Geometry survey to detect the nature, extent and location of geometry defect as detailed in Para 3.0 Part-II Technical Specifications. Contractor to provide detailed daily site report for each run in the approved format before commencing the subsequent run. The tool should be capable of inspecting entire length of the pipeline segment i. e. from launcher to receiver in a single run. Battery life should be adequate and commensurate with the run time required travelling the pipeline length. The electronic recorder system should have requisite data storage capacity. The drive cups should have requisite resistance to wear and tear to maintain effective seal throughout the entire run time.

The measurement shall cover the entire 360° of internal pipe wall circumference using properly oriented and sufficient quantity of sensors.

(d) Demobilization of all equipment, tools and personnel on completion of field activities for all segments.

(e) Final data analysis of the Geometry Inspection record at the Contractor's data analysis center. The analysis shall consist minimum of following: -

- Defect sizing (Depth & length) for all "significant defects" (Deformation >= 2% of ID).

- Identification of all pipeline permanent features e.g. valves, tees etc.

Copyright VCS Quality Services Private Limited – All rights reserved

Digitally signed by RACHNA SHUKLA
Date: 2025.03.13 12:53:14 IST

- Identification of potentially hazardous defects likely to affect structural integrity of the pipeline.

- Preparation of final processed inspection logs and preparation of complete WORK report giving interpretation of the inspection logs and giving defect sizing.
- The CONTRACTOR will transfer all the processed data generated on a CD with user-friendly operation on a compatible PC.

- Providing all the raw and processed data along with the software package for enabling COMPANY/CONSULTANT to study the data as required. The software should be user friendly.

(f) **BACK UP SERVICES**

The bidders are free to avail back up services from any international pigging company of repute for specialized services including special pigs, personnel, data analysis etc. However, the bidder in his bid shall clearly mention the name, address, contact person, telephone, fax, e-mail etc. of the company whose services are proposed to be availed by the bidder. Bidder to note that the main bidder shall be responsible for the entire SCOPE OF WORK in conformity with all provisions of the tender document.

2.1.1 CALIBRATION PROCEDURE

Calibration test of the electronic geometry tool to be deployed shall be performed at the tool owner's facilities prior to mobilization of the tool and submission of the calibration report by the contractor to owner/consultant. A machined ring of appropriate size shall be slipped over the sensing fingers. To simulate a dent, calibration blocks shall be placed under one sensing fingers in increments of 2.5mm upto the maximum of 100mm. Ovalities shall be simulated by two opposite sensing fingers with calibration blocks in increments of 5mm upto 100mm (200mm) are placed. Additionally for spider calibration, all sensing fingers shall be calibrated individually using blocks of 20mm or 40mm increments under each of the sensing fingers. The electronic components shall be checked both by a system test and functional test. Calibration procedure of the EGP tool shall be submitted by the contractor for owner/consultant's approval. Calibration test shall be witnessed and certified by the third party inspection agency. The consultant/owner shall review the report of the calibration test to ascertain the diagnostic capability. For each pipe size, separate calibration test shall be conducted. Tools having valid calibration tags including date of calibration shall be deployed at the site.

Copyright VCS Quality Services Private Limited – All rights reserved

Digitally signed by RACHNA SHUKLA
Date: 2025.03.13 12:53:14 IST

2.2 PROPELLING MEDIUM

Since pipeline is not commissioned, contractor shall use compressed air as propelling medium for which single compressor of 900 cfm capacity shall be used. The compressor should have the capacity to develop pressure upto 10KG/CM^2. Contractor shall also keep one compressor of the same capacity mentioned above as stand by. However, Contractor should mobilise higher capacity compressors in order to complete the magnetic cleaning and electronic geometry inspection to meet any contingency like stuck up pig/ early completion of pigging work. Contractor has to arrange all the facilities required for pressurizing air into the pipeline and running the pigs at required speed so that valid and interpretable data by running Electronic Geometry pig is generated by using the above media.

2.3 DEFECT VERIFICATION

At the discretion of the COMPANY/CONSULTANT Identify at least two verification dig sites (In case SIGNIFICANT defects are detected during Electronic Geometry Pigging) for each pipeline segment jointly with owner from the recorded data and provide VCS/owner defect sheet indicating distance from the nearest pipeline feature or reference marker to facilitate location of defect in the field.

The contractor shall depute his representative to observe the verification at verification sites for proving that field log detected anomalies conform to sizing, including linear positions.

2.4 FINAL WORK REPORT

The final work report shall be for each segment including Magnet Cleaning and Electronic Geometry pig runs details with operational and functional parameters, daily detailed site report of each run with observations, individual feature report, velocity plot of Electronic Geometry pig, etc as detailed out at Para 7.0. of part II.

3.0 PIG TRACKING

The movement of any type of pig put into the pipeline during Magnetic cleaning and Electronic Geometry Pigging shall be required to be monitored along the pipeline length from launcher to receiver trap. The BIDDER shall detail out the complete methodology of

Copyright VCS Quality Services Private Limited – All rights reserved

Digitally signed by RACHNA SHUKLA
Date: 2025.03.13 12:53:14 IST

pig tracking proposed to be deployed by him including complete technical details of the equipment and device proposed to be used for this purpose.

It is proposed that pig tracking would be done in a discrete manner at least 2 to 10 KM intervals on each pipeline segment at preselected locations. The exact KM chainage of these locations shall be decided at site in consultation with the CONTRACTOR and CONSULTANT/COMPANY.

4.0 ABNORMAL SITUATIONS:

The objective of this section is to write down foreseeable abnormal circumstances for taking appropriate measures, should such a condition arise during implementation of Project.

The COMPANY has foreseen the following abnormal conditions. However, if the BIDDER foresees any other abnormal condition, he is free to make a mention of the same in his technical BID offer:

4.1 TOOL FAILURE

CONTRACTOR is required to get valid interpretable and verifiable data for each segment of the pipeline. In case CONTRACTOR'S equipment fails to perform electronic geometry inspection to generate valid data for any of the pipeline segment, CONTRACTOR will make extra runs to get valid and physically verifiable data without any additional cost and time implication to the company.

4.2 STUCK-UP TOOL

The BIDDER shall detail out a contingency plan in his BID as proposed by him in case any of the pigs get stuck up. The plan shall identify procedure for exactly locating the stuck up pig, detail procedure for retrieval of pig, equipment, including support facilities required to retrieve the pig.

If Pig does not move from stuck up location, by any measure, then the pipeline section shall have to be cut for retrieval of Pig. Necessary fabrication and modification of pipe with new pipe piece after retrieval of pig shall be done by Contractor at no extra cost to the OWNER. Locating the stuckup pig and its retrieval shall be responsibility of the contractor.

Copyright VCS Quality Services Private Limited – All rights reserved

Digitally signed by RACHNA SHUKLA
Date: 2025.03.13 12:53:14 IST

After modification pigging Contractor shall run Gauge pig to check internal restriction, if any.

5.0 MISMATCH OF INSPECTION RESULTS WITH ACTUAL DEFECTS DURING SITE VERIFICATION:

- In case of variance between the results of physical defect verification and the results reported by the contractor on the basis of Electronic Geometry survey (after considering the tolerance as provided in the contract) segments, this shall be considered as a failed run and shall be dealt as per Cl.4.1 above.

Copyright VCS Quality Services Private Limited – All rights reserved

Digitally signed by RACHNA SHUKLA
Date: 2025.03.13 12:53:14 IST

PART II TECHNICAL SPECIFICATIONS

1.0 INTENT

The intent of the specification is to set-forth the requirements of the Electronic Geometry Survey of the pipelines to help bidder quote his unit rate price in the schedule of rates as applicable.

This requirement is not intended to be all inclusive and use of guidelines set-forth does not relieve the contractor of his responsibility of successfully carry out all activities and to obtain reliable and valid data from the EGP tool about condition of the pipeline as defined under Scope of work.

2.0 MAGNET CLEANING PIG RUNS

Prior to launching of Electronic Geometry pig, contractor shall complete all activities required to establish adequate cleanliness of pipeline to the satisfaction of the contractor and to verify the internal geometry of the pipeline with relation to ovality, dent etc. Contractor shall decide the number of Magnet cleaning pig runs and the choice of the Magnet cleaning pig for each cleaning run as suitable for the purpose to obtain internal condition adequately clean so as to obtain valid and interpretable inspection data from the Electronic Geometry pig and to safeguard Electronic Geometry pig against damage due to debris as detailed out at Para 2.1(c) Part-I Scope of Work and Technical Specifications.

The cleaning pigs for successive cleaning pig runs shall be selected by the contractor in such a manner that effective cleaning i.e. 3kg/100km ferrous debris is achieved. The detailed specifications of Magnet cleaning pig shall be furnished in the offer.

3.0 ELECTRONIC GEOMETRY PIG RUNS

The Electronic Geometry pig should be capable of recording the entire length of each segment i. e. from launcher to receiver in one single run and therefore its electronic recorder system should have requisite data storage capacity. Battery life therefore should be adequate to commensurate with the run time required to travel the pipe length of each segment and the drive cups should have requisite resistance to wear and tear to maintain effective sealing throughout the entire run time. Bidder to furnish a calibration certificate for EGP prior to mobilization of equipment. OWNER reserves the right of witnessing calibration test at Contractors designated location at Owner's expenses.

Copyright VCS Quality Services Private Limited – All rights reserved

Digitally signed by RACHNA SHUKLA
Date: 2025.03.13 12:53:14 IST

The measurement shall cover the entire 360° of internal pipe wall circumference using properly oriented and sufficient no of sensors. The tool shall be capable to identify and locate the following features as a minimum.

- Individual Girth weld
- Dent, ovality, buckles, or any other out of roundness, change in pipeline I.D. and difference of thickness.

BIDDER to supplement the following information in his BID. so that same can be checked w.r.t the parameters given in Para 4.0 below as required.

a. Accuracy of locating indication/I.D. Reduction w.r.t to axial length (Meters).

b. Max. % Of Nominal pipeline ID tool can pass (% ID)

c. Minimum deformation level Reported (as % of ID)

d. Accuracy of Measurement (% of ID)

e. Bend radius tool able to negotiate

4.0 DEFECT SIGNIFICANCE

The following information/performance is expected out of the Electronic Geometry pig inspection:

4.1 Inspection of entire length of each segment to be completed in one single run.

4.2 Accuracy of defects:

The best accuracy offered and guaranteed by the BIDDER for each category of defect should be clearly spelt out. However, the tool should have minimum capabilities as under.

Minimum Detection level for dent: 2% of ID
Sizing Accuracy for dent: +0% of ID, -25%of measured value

Copyright VCS Quality Services Private Limited – All rights reserved

Digitally signed by RACHNA SHUKLA
Date: 2025.03.13 12:53:14 IST

Minimum detection level for Ovality: 5% of ID

Sizing Accuracy for Ovality: +/- 1% of ID

Location Accuracy Axial: 0.1% from Permanent Features.
The tool should be capable of negotiating minimum 3D bend and 15%reduction in Pipe ID.

5.0 MAX RUN LENGTH OF LIVE TOOL:

The BIDDER must specify in his offer the max. Length which can be inspected in one single continuous run by the tool proposed by him. It is required to complete the entire run length of each segment of the pipeline in a single run. The length of each pigging segment shall be based on the length of hydro testing of the pipeline. However, length of pigging segment up to 200 Km or distance between two pigging stations, whichever is more, shall be acceptable.

6.0 DATA ANALYSIS:

Bidder shall carry out the data analysis for EGP. BIDDER shall provide all raw and processed data and his software package along with his compatible hardware. The software package shall be user friendly. It should provide full capability for data study.

7.0 FINAL WORK REPORT

The BIDDER shall include in his offer the most appropriate reporting procedure envisaged for the subject pipeline. This will have to be mutually agreed between the successful bidder and consultant/company.

However, any reporting system shall include but not limited to the following:

- A detailed report in respect of each pipe segment of running each of the pre-inspection tools such as Magnet cleaning pig.

- Detailed report about running of the Electronic Geometry pig including but not limited to the operational and functional details. Details describing the type, size and location of individual mechanical defects. The location of each defect should be suitably listed with reference to permanent pipeline features, girth weld no., relative and absolute distance.

Copyright VCS Quality Services Private Limited – All rights reserved

Digitally signed by RACHNA SHUKLA
Date: 2025.03.13 12:53:14 IST

- A detailed report in respect of each defect for which sizing has to be done indicating its length, depth and axial location suitably referenced.

- Preliminary site report for each pipe segment for each running of Magnet cleaning, and Electronic Geometry pig runs stating comments/observations of each run, pig condition, operating parameters, and total time required.

- Velocity plot of the Electronic Geometry pig along the length of the segment.

The format and Performa of the above report shall be mutually agreed upon between the successful BIDDER and CONSULTANT/COMPANY.

All the data generated by the CONTRACTOR shall be compiled in CD having user-friendly operation on a Compatible PC along with the software necessary for review/analysis of data. This is required to facilitate selection of significant defects, their chainage and sizing. CONTRACTOR will furnish this floppy disk and CD as part of report.

Copyright VCS Quality Services Private Limited – All rights reserved

Digitally signed by RACHNA SHUKLA
Date: 2025.03.13 12:53:14 IST

VCS QUALITY SERVICES PVT. LTD.

STANDARD SPECIFICATION

FOR

REPAIR OF POLYTHYLENE COATING

VCS – SS – PP -2027

Rev. No	Date	Prepared By	Checked By	Approved By	Authorized By
02	29.04.2022	RP	MC	HK	GW
01	28.01.2020	MB	MD	AD	SK

UNCONTROLLED COPY	:	If printed
CONTROLLED COPY	:	If in soft and signed

Copyright VCS Quality Services Private Limited – All rights reserved

Digitally signed by RACHNA SHUKLA
Date: 2025.03.13 12:53:14 IST

REVISION RECORD						
Rev.	**Revision Date**	**Prepared by**	**Checked by**	**Approved by**	**Authorized by**	**Revision Description**
00	21.02.2019					Issued as Standard Specification.
		SS	MC	AD	SK	
01	28.01.2020					Document numbering updated from VPC-SS-PL-0043 to VPC-SS-PP-2027
		MB	MD	AD	SK	
02	29.04.2022					VCS QMS Integration
		RP	MC	HK	GW	

Copyright VCS Quality Services Private Limited – All rights reserved

Digitally signed by RACHNA SHUKLA
Date: 2025.03.13 12:53:14 IST

ABBREVIATIONS:

DC	:	Direct Current
EN	:	European Standard
KV	:	Kilo Volt

Copyright VCS Quality Services Private Limited – All rights reserved

Digitally signed by RACHNA SHUKLA
Date: 2025.03.13 12:53:14 IST

CONTENTS

1.0 SCOPE 5
2.0 MATERIAL AND EQUIPMENT 5
3.0 APPLICATION PROCEDURE 5
4.0 INSPECTION AND TEST 6
5.0 DOCUMENTATION 6

Copyright VCS Quality Services Private Limited – All rights reserved

Digitally signed by RACHNA SHUKLA
Date: 2025.03.13 12:53:14 IST

1.0 SCOPE

This specification covers the minimum requirements for materials and equipment, application procedure and inspection of repair of damaged Polyethylene coatings on steel pipes. This specification is applicable for repairing damages less than 100mm x 100 mm for pipe sizes less than 10", 150mm x 150mm for pipe sizes between 12" to 28" and 300mm x 300mm for pipe sizes more than 28".

If damaged area of coating of the pipeline is larger than above, heat shrinkable sleeve is recommended.

The repair shall be carried out using repair patch made of radiation cross-linked polyolefin backing, coated on the inside with semi-crystalline thermoplastic adhesive and filler mastic.

The repair patch shall have thermal indicators to ensure correct heat is being applied during application.

2.0 MATERIAL AND EQUIPMENT

2.1 The repair material shall be as under:

a) Repair Patch: radiation cross-linked HDPE (Unexpanded High density polyethylene) with semi-crystalline thermoplastic adhesive.

b) Mastic Filler

c) Melt stick shall be Co-Polymer based and same shall be heat sensitive.

d) Liquid Epoxy Primer (two pack)

2.2 The repair material shall be certified by DIN to meet the requirements of EN12068 Stress Class CHT 80

2.3 The material shall not be older than their period of validity at the time of application by the Contractor. Deteriorated/decomposed materials shall not be used.

2.4 Materials shall be stored in sheltered storages in the manufacturer's original packing away from direct sunlight and in accordance with manufacturer's instructions.

2.5 Contractor shall supply all equipment and manpower required for a skilful application in the field in accordance with the specification.

3.0 APPLICATION PROCEDURE

3.1 The application procedure to be followed for holiday type of damage shall be in accordance with manufacturer's instruction and minimum requirement specified below whichever are the more stringent.

3.1.1 Preparation

Remove coating from damaged area with knife, scraper or power brush. Scrap off the damaged area and adjacent coating to remove oil, grease, rust, dirt and moisture. Pipe surface shall be prepared to SA 2½.

3.1.2 Preheating

Preheat the exposed bare metal surface to approx. 80° C and adjacent pipe coating to approx. 60° C with a torch moved back and forth over the surface. Upon preheating, the

Copyright VCS Quality Services Private Limited – All rights reserved

Digitally signed by RACHNA SHUKLA
Date: 2025.03.13 12:53:14 IST

pipe surface shall be applied with the two pack epoxy primer to ensure a minimum wet film thickness of not less than 200 microns to cover the exposed base metal.

3.1.3 Application of the Filler

Plastic filler shall be cut to size and applied to all exposed metal surface. The mastic shall be heated and smoothed down with a paint scraper to cover all bare metal in a manner such that all entrapped air is removed and mill applied coating thickness of the pipe is restored.

3.1.4 Application of repair tape

A patch shall be cut from the tape in a manner such that it extends 50 mm (2 inch) beyond the damaged area on all sides. The patch shall be positioned over the damaged area and heated until the temperature sensitive paint on the outside of the patch changes colour or dimples on the backing vanish. It shall be smoothed down to confirm with the contour of lap, and shall be freed of any air bubbles or wrinkles.

3.2 For cosmetic type of defects such as minor gouging, tearing, and/or scratches, which do not indicate holiday during holiday inspection, following procedure shall be adopted.

3.2.1 The defective area shall be roughened to remove loose polyethylene coating, oil, grease, dirt, etc.

3.2.2 This shall be followed by application of patch as detailed in clause 3.1.4.

4.0 INSPECTION AND TEST

4.1 A visual inspection shall be carried out for the following:

- Mastic extrusion on ends of the patch shall be examined.
- There shall be no sign of punctures or pinholes or bend failure. The external appearance of the patch shall be smooth, free from dimples, air entrapment or void formation.
- The entire closure patch shall have changed colour uniformly.

4.2 Holiday Inspection

The holiday detector used shall be checked and calibrated daily with an accurate D.C. Voltmeter. The detector electrode shall be in direct contact with the surface of coating to be inspected.

The entire surface of the repaired section shall be inspected by means of a full circle holiday detector approved by Owner set to a D.C. Voltage of at least 25 KV. Inspection of repaired patch shall be conducted only after it has cooled below 50° C.

4.3 Procedure qualification shall be carried out for repair patch. The value for peel strength to pipe surface and to factory coating carried out as per EN 12068 shall be 0.5 N/mm minimum at 60°C.

4.4 All repaired joint shall be approved by the Owner.

5.0 DOCUMENTATION

5.1 Prior to procurement of coating repair materials, Contractor shall furnish four copies of,

Copyright VCS Quality Services Private Limited – All rights reserved

Digitally signed by RACHNA SHUKLA
Date: 2025.03.13 12:53:14 IST

but not limited to, the following for qualification of the Manufacturer and material:

i) Complete descriptive technical catalogs describing the materials offered along with samples of repair coating materials, its properties and installation instruction as applicable specifically to the project.

ii) Test certificate and results of previously conducted tests from independent inspection agency, for properties listed in Para 4.3 of this specification.

iii) Reference list of previous supplies of the similar material indicating the project details such as diameter, quantity, service conditions, year of supply, project name, contact person and feedback on performance.

Once the Company's approval has been given, any change in material or Manufacturer shall be notified to Company, whose approval in writing of all changes shall be obtained before the materials are manufactured.

5.2 Prior to shipment of materials from the Manufacturer's works, Contractor shall furnish six hard copies and an electronic copy of the following:

i) Test certificates for each batch of materials.
ii) Specific installation instruction with pictorial illustrations.
iii) Specific storage and handling instructions.

5.3 All documents shall be in English Language only.

Copyright VCS Quality Services Private Limited – All rights reserved

Digitally signed by RACHNA SHUKLA
Date: 2025.03.13 12:53:14 IST

VCS QUALITY SERVICES PVT.LTD.

STANDARD SPECIFICATION
FOR INSULATING JOINT

VCS-SS-PP-2029

Rev. No	Date	Prepared By	Checked By	Approved By	Authorized By
04	29.04.2022	RP	MC	HK	GW
03	03.01.2022	SR	MC	HK	HK

UNCONTROLLED COPY	:	If printed
CONTROLLED COPY	:	If in soft and signed

Copyright VCS Quality Services Private Limited – All rights reserved

Digitally signed by RACHNA SHUKLA
Date: 2025.03.13 12:53:14 IST

REVISION RECORD						
Rev.	**Revision Date**	**Prepared by**	**Checked by**	**Approved by**	**Authorized by**	**Revision Description**
00	23.06.2017					Issued as Standard Specification
		AS	SM	AD	SK	
01	28.01.2020					Document formatting, numbering updated from SS-PL-022 to VPC-PP-SS-2029 other detail update as marked
		MB	MD	AD	SK	
02	23.05.2020					Revised as Marked
		SS	MC	AD	SK	
03	03.01.2022					Revised as Marked
		SR	MC	HK	SK	
04	29.04.2022					VCS QMS Integration
		RP	MC	HK	GW	

Copyright VCS Quality Services Private Limited – All rights reserved

Digitally signed by RACHNA SHUKLA
Date: 2025.03.13 12:53:14 IST

ABBREVIATIONS:

ASME	American Society of Mechanical Engineers
ASTM	American Society for Testing and Materials
API	American Petroleum Institute
BHN	Brinell Hardness Number
HAZ	Heat Affected Zone
MSS-SP	Manufacturers Standardization Society - Standard Practice
RTJ	Ring Type Joint
SSPC	Steel Structures Painting Council

Copyright VCS Quality Services Private Limited – All rights reserved

Digitally signed by RACHNA SHUKLA
Date: 2025.03.13 12:53:14 IST

CONTENTS

1.0 SCOPE 5

2.0 REFERENCE DOCUMENTS 5

3.0 MATERIALS 6

4.0 DESIGN AND MANUFACTURE 8

5.0 INSPECTION AND TESTS 11

6.0 PAINTING 13

7.0 MARKING 13

8.0 TEST CERTIFICATES 13

9.0 PACKING & SHIPPING 13

10.0 DOCUMENTATION 14

Copyright VCS Quality Services Private Limited – All rights reserved

Digitally signed by RACHNA SHUKLA
Date: 2025.03.13 12:53:14 IST

1.0 SCOPE

This Specification covers the minimum requirement for the design, manufacture, testing and supply of carbon steel insulating joints to be installed in onshore pipeline systems handling non sour hydrocarbons in liquid or gaseous phase including Liquefied Petroleum Gas (LPG).

2.0 REFERENCE DOCUMENTS

The design, materials, fabrication, inspection, testing and supply of insulating joints shall comply with the latest edition of the following codes and standards.

AMERICAN SOCIETY OF MECHANICAL ENGINEERS (ASME)

B31.4	:	Pipeline Transportation System for Liquid and slurries.
B 31.8	:	Gas Transmission and Distribution Piping Systems.
B16.9	:	Factory made Wrought Butt Weld Fittings.
B 16.25	:	Butt Welding Ends.
BPVC Section VIII	:	Boiler and Pressure Vessel Code - Rules for Construction of Pressure Vessels, Division 1.
BPVC Section IX	:	Welding and Brazing Qualifications.
BPVC Section V	:	Non-Destructive Examination.

AMERICAN PETROLEUM INSTITUTE (API)

Specification 5L	:	Specification for Line Pipe.
1104	:	Specification for Welding Pipelines and Related Facilities.

AMERICAN SOCIETY FOR TESTING AND MATERIALS (ASTM)

A370	:	Standard Test Methods and Definitions for Mechanical Testing of Steel Products.
D2000	:	Classification System of Rubber Products.
D709	:	Laminated Thermosetting Material.

MANUFACTURERS STANDARDIZATION SOCIETY (MSS)

SP-25	:	Standard Marking System for Valves, Fittings, Flanges and Unions.
SP-75	:	Specification for High Test Wrought Butt Welding Fittings.
SP-53	:	Quality Standard for Steel Castings and Forgings for Valves, Flanges and Fittings and Other Piping Components - Magnetic Particle Examination Method.

Copyright VCS Quality Services Private Limited – All rights reserved

Digitally signed by RACHNA SHUKLA
Date: 2025.03.13 12:53:14 IST

National Association of Corrosion Engineers (NACE)

RP 0286	:	Standard Recommended Practice, Electrical Isolation of Cathodically Protected Pipelines.

STEEL STRUCTURES PAINTING COUNCIL (SSPC)

VIS-I	:	Visual Standard.
SP-10	:	Surface Preparation.

PNGRB REGULATIONS :

G.S.R 808(E) T4S : Regulations for Natural Gas Pipelines

G.S.R. Infra/ T4S/ P&PPL : Regulations for Petroleum and Petroleum products pipelines

G.S.R. 612(E) T4S : Regulations for CGD Network

MISCELLANEOUS

NEC	:	National Electric Code.
ISO 2409	:	Paints and Varnishes - Cross-Cut test.

In case of conflict between various requirements of this specification and reference standards, codes and regulations mentioned above, more stringent requirement shall apply unless otherwise agreed by Purchaser.

3.0 MATERIALS

3.1 METALLIC COMPONENTS

3.1.1 Material for the pressure containing parts of the insulating joints shall be as indicated in the Insulating joint Data Sheet. Other parts shall be as per the Manufacturer's standard (Suitable for the service conditions indicated in the Insulating Joint Data Sheets/Material requisition), which shall be subject to approval by Company. In addition, the material shall also meet the requirements specified hereinafter.

3.1.2 All process-wetted parts, metallic and non-metallic shall be suitable for the commissioning fluid and service specified by the Company. Manufacturer shall confirm that all wetted parts are suitable for treated water/seawater environment, which may be used during field testing.

3.1.3 All carbon steel used for fabrication of various components of insulating joints shall be fully killed.

3.1.4 For Insulating joints specified to be used for Gas Service or LPG Service, hardness test shall be carried out as per ASTM A370 for each heat of steel used for all pressure containing parts. A full thickness cross section shall be taken for this purpose and the maximum hardness of base metal, weld metal & HAZ of all the pressure containing parts shall not exceed 248 HV10. Hardness shall be recorded.

3.1.5 The carbon equivalent (CE) based on product analysis calculated by the formula shall not exceed 0.45 based on check analysis for each heat of steel used.

$$CE = C + \frac{Mn}{6} + \frac{Cr + Mo + V}{5} + \frac{Cu + Ni}{15}$$

Copyright VCS Quality Services Private Limited – All rights reserved

Digitally signed by RACHNA SHUKLA
Date: 2025.03.13 12:53:14 IST

3.1.6 The Manufacturer shall select materials as indicated in the data sheet along with the defined operating (Temperature/ Pressure) parameters and in accordance with ASME B 31.4/ B 31.8, as applicable and ANSI B16.25 for butt welding ends. Internal bore of weld joints shall not impede the pigging process or represent potential pig damage. The Manufacturer shall perform post weld heat treatment (PWHT) if required by the corresponding approved weld procedures. The Manufacturer shall prove by calculations to ASME VIII Division 1 that the materials supplied satisfy the pressure/temperature rating as specified in Data Sheet.

3.1.7 For Insulating Joint Specified to be used for Gas Service or LPG Service. Charpy V-notch test shall be conducted on each heat of steel used in manufacturing of the pressure containing parts including pipe pups and retainer ring of Insulating joint in accordance with ASTM A370. Unless otherwise stated Charpy V-notch test shall be conducted at 0°C or at lower temperature as specified in data sheet / material requisition. The specimens shall be taken in the direction of principal grain flow and notch perpendicular to original sample of plate or forging.

The minimum average absorbed impact energy value of the set of three (3) full size specimens tested at 0°C shall be 27J. The minimum impact energy value of any one specimen of three specimen analyzed as above shall not be less than 22J. Result of Charpy shall be recorded.

In case of Low Temperature Carbon Steel (LTCS) material specified in data sheet or offered manufacturers, the Charpy-V notch test requirement of applicable material standard shall be compiled with.

3.2 NON METALLIC COMPONENTS

Minimum thickness requirement of insulating material shall comply with NACE RP 0286.

Epoxy resin filler material used shall be CIBA Araldite CY-220 & Araldite HT-951 hardener or an approved equivalent.

Insulating rings (Spacing Ring) and joint filler material shall be flame resistant and capable of safely withstanding the maximum operating temperature without distortion or loss of insulating properties. Non-metallic seal materials, if provided, shall be resistant to amine-based corrosion inhibitors and explosive decompression.

The spacing ring shall be of epoxy glass fiber reinforced laminate. It shall possess high insulating properties that would comply with ASTM D 709 Type IV, Group G-11 properties. The materials compressive properties shall be equal to or greater than 450 MPa. The epoxy glass fiber laminates material shall possess anti-aging properties. The spacing ring, sealing gasket / Ring and filling material shall be resistant to flames and diffusion of gases, absorption of moisture and shall be capable of maintaining their required compressive strength and insulating properties over the design life of the pipeline.

Adhesive sealant or a low viscosity, cold curing thermosetting resin shall be used as filling material. Its compressive strength shall be equal to or greater than 150 MPa.

Plastic material shall be compatible to the materials they are in contact with. The Manufacturer shall give the details of the plastic used and its mechanical, chemical and temperature resistance properties.

3.3 INSULATING MATERIAL

- The design of insulating material shall conform to following requirements

Copyright VCS Quality Services Private Limited – All rights reserved

Digitally signed by RACHNA SHUKLA
Date: 2025.03.13 12:53:14 IST

- The electric resistance does not decrease with time.
- The insulating material shall not deform.
- The insulating material shall be resistance to chemical attack by transferred fluid under design temperature and pressure.
- The transferred fluid does not penetrate into the structure of the insulating material under design conditions of pressure and temperature.

4.0 DESIGN AND MANUFACTURE

4.1 GENERAL

a. The monolithic insulating joints as per figure shall be designed so as to provide an effective electrical barrier by isolation between the buried pipeline and the above ground pipeline and other pipelines. Suitable for above or below ground installation as defined in the data sheet. The Manufacturer shall provide a proven design.

b. The insulating joints shall be of the monolithic bolt-less design comprising of forged sections assembled together by welding to form an integral unit. Insulating joint shall be fabricated by welding the forged retainer to pre-assembled insulating components and hub, under compression, so as to ensure effective sealing. Final assembly of joint shall be by welding only. Crimped and screwed closing joints are not permitted.

c. The hydrostatic test pressure for the insulating joints shall be 1.5 times the design pressure.

d. The insulating joints shall be designed for welding to the line pipe with weld ends. Bolted and flanged connections are not allowed.

e. The insulating joint shall have a smooth clear bore and be suitable for uninterrupted passage of all type pigs, spheres and on-line inspection tools. The internal bore of insulating joint shall match the bore of connected pipe as indicated in data sheet.

f. The design shall ensure that over the time of service the carrier product shall not permeate in the cavity.

g. The selected seal material shall be resistant to the chemicals and the operating temperature and pressure of the pipe system. At least 90% of the gasket shall be in contact with bare metal surface. The sealing gasket shall be of sufficient thickness and shall be made out of one piece of material, no joints are permitted.

h. The insulating joint shall be able to sustain an internal vacuum of one (1) millibar.

i. No stress inducing recess, protrusions or notches, are permitted in the internal surface of the supplied joint. Additional fillers are not permitted to fill these flaws.

j. The cavities inside the joint shall be filled with low viscosity dielectric material that solidifies on curing. Air pockets and impurities in the dielectric material shall not be accepted.

k. The Manufacturer shall submit the detailed sectional drawing of the longitudinal face of the joint. The cross-sectional drawing shall show all parts, materials, dimensions surface finishes and tolerances.

Copyright VCS Quality Services Private Limited – All rights reserved

Digitally signed by RACHNA SHUKLA
Date: 2025.03.13 12:53:14 IST

l. The electrical resistance of the joint shall not decrease with time. The joint shall include permanent terminals for survey lead connections.

m. The insulating joint material shall be resistant to creep.

n. The external fasteners shall be hot dip galvanized as per ASTM A 153.

4.2 DESIGN

4.2.1 MECHANICAL DESIGN

a. Main components of insulating joints such as forged hub, the stub end and the retainer ring, gaskets etc. shall be designed in accordance with Section VIII, Division 1, Appendix-2 of ASME, Boiler and Pressure Vessel Code. Design factor shall be in accordance with the data sheet.

b. Insulating joints shall be designed using the design principles of ASME Section VIII Div. 1. The design shall be checked for the following two cases:

CASE-1: Design pressure (as per Data Sheet) and Axial Force (F).

The Axial force shall be calculated as under:

F= 0.1 x S x A

Where S= SMYS of connected pipe (refer Data Sheet)

A= Metal cross-sectional area of connected pipe.

The allowable stress in this case shall be less than or equal to 0.5 x SMYS of insulating joint material.

CASE-2: Hydrostatic Test Design pressure

The allowable stress in this case shall be less than or equal to 90% of SMYS of insulating joint

material. All design parameters shall be as per Insulating Joint Data Sheet. Detailed design calculations shall be submitted for Company approval.

c. A corrosion allowance, as indicated in data sheets, shall be considered in design for operating condition.

d. Surfaces of the annular space between pup and retainer shall be abrasive blasted to a SA 2½ finish. Assembly of the insulating joint shall commence within two hours of completion of abrasive blasting. The annular space between the retainer and the spool shall be filled with epoxy resin.

e. The joint shall be assembled in a way that the internal components are firmly locked in position. The completed joint shall be capable of withstanding the operating and testing stresses. The neck of the bell shall be sealed with mastic. The design shall consider the position of the spacing ring, sealing gasket and filling material, so that the temperature of these materials remains below 60°C during tie-in welding operation.

4.2.2 PUPS

a. Insulating joints shall be supplied with pup pieces welded to each end by the Manufacturer. Pipe material used shall be as indicated in data sheets. The pup pieces shall be of equal length. The length of pup pieces shall be minimum 500mm or as specified on the data sheet.

Copyright VCS Quality Services Private Limited – All rights reserved

Digitally signed by RACHNA SHUKLA
Date: 2025.03.13 12:53:14 IST

b. The end of the pups to be field welded shall be beveled in accordance with ASME B 31.4/31.8, as applicable. Pipe pups shall be welded to the insulation joint assembly prior to hydrostatic strength and leak testing.

c. When LSAW pipes are used as pups, the reinforcement of inside weld seam shall be removed for a distance of at least 50 mm from each end.

d. The joint between pipe pup pieces and main forging shall be full penetration butt weld type. Weld design shall be such as resulting in a weld joint factor of 1.0.

e. The tolerance on internal diameter and out of roundness at the ends for Insulating joints shall be as per applicable connected pipe specification as indicated in the Data Sheet.

4.2.3 ELECTRICAL

a. The average dielectric strength of the insulating joint shall be minimum 15 KV or more.

b. Two cleats/cable terminators shall be welded on pups on each side of insulating joint. The cleats shall be suitable for connecting 10mm² and 50mm² cables for measurement/shorting purposes. Cleat Shall be attached to Insulating joint by welding. Refer Fig 4.1 for details.

4.2.4 WELDING

a. All welds except closing weld shall be butt welds. The closing weld shall be full penetration girth weld in accordance with ASME BPVC Section VIII, Division 1. The weld design shall conform to the ASME acceptable standards. Fillet welds if required, shall have minimum two passes.

b. Butt weld end shall have end prepared as per ASME B 16.25. However, end preparation for butt welding end having unequal thickness w.r.t connecting Pipe, shall be shall be prepared in accordance with ASME B31.4/ B31.8, as applicable. All butt weld ends shall be checked for surface defects using dye penetrate (As per Appendix 8 of ASME Section VIII) prior to welding.

c. All welding shall be carried out by welders and welding procedure qualified in accordance with ASME Section IX. The procedure quantification to include hardness and impact test shall meet the requirement of clause 3.1.4 & 3.1.7.

d. No repairs by welding shall be carried out on base metal of any component of insulating joint. Manufacturer shall obtain Purchaser approval prior to carrying out any repair of welds. The repair welding shall be carried out by welders and welding procedures duly qualified per ASME Section IX and records for each repair shall be maintained. Welding procedure and repair welding procedure qualification shall include requirements for impact testing & hardness test when required as per Clause 3.1.4 & 3.1.7 of this specification and shall meet the requirement therein. Radiography shall be performed after the repair

e. Cold die stamping on insulating joints or pups is not permitted on the body. Cold die stamping can be done on the pipe bevel.

f. The repair of the forging by welding is not permitted. All production welding, including tacking shall be done as per the qualified procedure by the qualified welder/ operators. The acceptable weld processes are:

- Shielded Metal Arc Welding (SMAW)
- Submerged Arc Welding (SAW)

Copyright VCS Quality Services Private Limited – All rights reserved

Digitally signed by RACHNA SHUKLA
Date: 2025.03.13 12:53:14 IST

- Gas Metal Arc Welding (GMAW)

g. The Manufacturer shall ensure that all the mechanical works are completed prior to the post weld heat treatment and hydrostatic test. Any re-work (welding, cutting and grinding) on the surface of the material after the PWHT or hydrostatic testing is not permitted.

h. The need for Post Weld Heat Treatment (PWHT) shall be assessed by the Manufacturer in accordance with the relevant weld procedure.

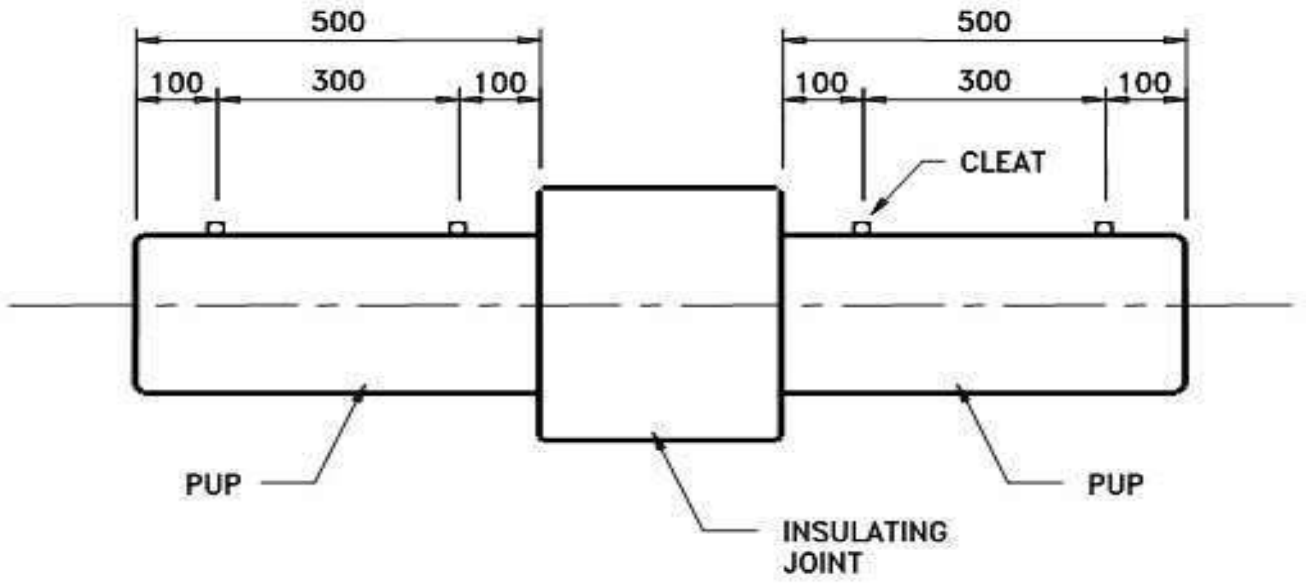

FIG. 4.1

5.0 INSPECTION AND TESTS

The Manufacturer shall ensure all equipment used for testing and inspection purposes is calibrated and certified accordingly. The Manufacturer shall record all inspection and testing activity on the appropriate inspection certificate. The following minimum inspection and testing shall be carried out prior to painting, marking and shipment of insulating joints.

5.1 TESTING OF MATERIALS

Chemical composition and mechanical tests including yield strength, ultimate tensile strength, impact test, elongation and hardness shall be carried out for each heat of steel used as per the applicable standard as referred to in this specification.

5.2 VISUAL INSPECTION AND DIMENSIONAL CHECK

All insulating joints shall be visually inspected for visible surface defects and compliance with related documents. The Internal The internal and external surfaces shall be free from any strikes, gouges and other detrimental defects Bevels at butt weld ends shall show a smooth contour. All dimensions shall be checked for conformance with approved drawings.

Copyright VCS Quality Services Private Limited – All rights reserved

Digitally signed by RACHNA SHUKLA
Date: 2025.03.13 12:53:14 IST

5.3 NON-DESTRUCTIVE EXAMINATION

As a minimum all NDT shall be performed in accordance with ASME Section V and examination according to ASME Section VIII or as defined herein.

a. Full length of all pressure containing butt welds, including welds that have been repaired, shall be examined 100% by radiography. Acceptance limits shall be as per API 1104

b. Any other weld that, in Purchaser's opinion, cannot be radiographed shall be inspected by ultrasonic or magnetic particle methods. Acceptance criteria shall be as per ASME Section VIII Appendix 12 and Appendix 6 respectively. Root pass of joint closure weld shall be examined by magnetic particle inspection method.

c. All forging shall be wet magnetic particle inspected on 100 % of forged surface. Method of inspection and acceptance shall comply MSS-SP-53.

d. All finished weld ends shall be 100% ultrasonically tested for lamination type defects for a distance of 50 mm from the ends. Any lamination larger than 6.35 mm shall not be acceptable.

e. All fillet welds shall be non-destructively examined as follows:

Fillet thickness < 6 mm	:	100% by magnetic particle inspection, acceptance criteria as per ASME Sec VIII Appendix 6.
Fillet Thickness ≥ 6 mm	:	100% by Ultrasonic Testing, acceptance criteria as per ASME Sec VIII Appendix 12 respectively.

f. All NDT shall result shall documented and be available for Purchasers review.

5.4 HYDROSTATIC TEST

A hydrostatic test shall be carried out on each insulating joint complete in all respects. The test pressure as indicated in data sheets shall be held for a period of 15 min and the assembly visually inspected for leaks. Any pressure changes must correspond with temperature changes otherwise the test will not be acceptable. Test records to be maintained accordingly by Manufacturer.

After hydrostatic test, insulating joints shall be tested with air at 5 kg/cm^2 for 10 minutes. The tightness shall be checked by immersion or with a frothing agent. No leakage will be accepted.

5.5 DIELECTRIC TEST

Insulation resistance of each insulating joint shall be at least 25 Mega Ohms, when checked with 500-1000 V DC.

In addition, prior to and after hydro testing, each insulating joint shall be tested for dielectric integrity at 5000 V AC, 50 Hz for one minute and the leakage current before and after the hydrostatic test shall be equal. Testing time, voltage and leakage shall be recorded and certified.

No repair shall be permitted to the insulating joints failed in the above-mentioned tests.

Company reserves the right to perform stage wise inspection and witness tests as indicated in clause 5 at Manufacturer's Works prior to shipment. Manufacturer shall give reasonable notice of time and shall provide without charge reasonable access and facilities required for inspection by the Company's Inspector. Inspection and tests performed/witnessed by the Company's Inspector shall in no way relieve the Manufacturer's obligation to perform the required inspection and tests.

Copyright VCS Quality Services Private Limited – All rights reserved

Digitally signed by RACHNA SHUKLA
Date: 2025.03.13 12:53:14 IST

6.0 PAINTING

SURFACE PREPARATION

Surface preparation for all coated surfaces according standard SSPC-SP-10 by shot blasting

PAINTING

Exterior surfaces of all insulating joints shall be painted with a non-conducting epoxy, three layer paint coating system. The internal lining shall be of a two-pack (solvent free) non-conducting epoxy compound (cold or hot curing).

The internal coating shall be suitable for the service and design conditions indicated in data sheets, and shall neither be damaged by or cause damage to pipeline pigs including inspection and scraper pigs.

The internal and external coating/lining shall be cut back by 75mm from the weld-edge. Coating system and procedure shall be approved by Purchaser prior to manufacture.

7.0 MARKING

All insulating joints shall be fitted with a stainless-steel name plate with following markings die stamped or raised letters in metric units:

- Manufacturer's Name.
- Suitable for _____Inch Nominal Diameter Pipeline.
- End Thickness in mm.
- Material.
- Design Pressure / Hydrostatic Test Pressure.
- ANSI Class Rating.
- Tag No.
- Year of Manufacture.

8.0 TEST CERTIFICATES

Manufacturer shall submit following certificates to Company's inspector:

- Test certificates relevant to the chemical analysis and mechanical properties of the materials used for construction of insulating joint as per this specification and relevant standards.
- Test reports on non-destructive testing.
- Test certificates for hydrostatic and air tests.
- Test certificate for electrical tests.

9.0 PACKING & SHIPPING

All butt weld ends shall be suitably protected to avoid any damage during transit by means of metallic or high impact plastic bevel protectors; and all assemblies shall be cleaned from inside of all foreign materials, grease, rust etc. prior to packing. Prior to shipment, parts and equipment which have bare metallic surfaces shall be protected with a rust preventative which will provide protection at temperatures up to 50°C. Sealing surfaces and moving parts to have a graphite grease coating applied.

Copyright VCS Quality Services Private Limited – All rights reserved

Digitally signed by RACHNA SHUKLA
Date: 2025.03.13 12:53:14 IST

The Manufacturer shall supply packing and shipping procedure with the tender. All Insulation joints shall be packed and prepared for shipment/transport in accordance with the procedures included in the Request for Quotation (RFQ) documentation, subsequently approved by the Purchaser.

Only those insulating joints, which have been inspected and certified by Company's Inspector,shall be shipped.

10.0 DOCUMENTATION

Documentation to be submitted by Manufacturer to Company is summarized below. Number of Copies (Hard copies / soft copies etc.) shall be as indicated in CONTRACT document.

10.1 At the time of bidding, Bidder shall submit the following documents:

- Reference list of similar supplies including all relevant details viz. Project, Year of supply, Client, Location, Size, Rating and Service for the last seven years.

10.2 After placement of order, the Manufacturer shall submit the following drawings, documents and specifications for company's review and information:

- General arrangement drawings of flow tees with overall dimensions and cross-sectional drawing including relevant calculations for pressure containing parts.

10.3 All documents shall be in English Language.

Copyright VCS Quality Services Private Limited – All rights reserved

Digitally signed by RACHNA SHUKLA
Date: 2025.03.13 12:53:14 IST

VCS QUALITY SERVICES PVT. LTD.

STANDARD SPECIFICATION
FOR
THIRD PARTY INSPECTION AGENCY (TPIA)

VCS – SS – PP - 2031

					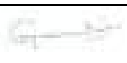
01	25.11.2022	AY	MC	HK	GW
00	28.01.2020	MB	MD	AD	SK
Rev. No	Date	Prepared By	Checked By	Approved By	Authorized By

UNCONTROLLED COPY	:	If printed
CONTROLLED COPY	:	If in soft and signed

Copyright VCS Quality Services Private Limited – All rights reserved

Digitally signed by RACHNA SHUKLA
Date: 2025.03.13 12:53:14 IST

REVISION RECORD						
Rev.	**Revision Date**	**Prepared by**	**Checked by**	**Approved by**	**Authorized by**	**Revision Description**
00	28.01.2020					
		MB	MD	AD	SK	
01	25.11.2022					VCS QMS Integration
		AY	MC	HK	GW	

Copyright VCS Quality Services Private Limited – All rights reserved

Digitally signed by RACHNA SHUKLA
Date: 2025.03.13 12:53:14 IST

ABBREVIATIONS:

TPIA	THIRD PARTY INSPECTION AGENCY
QA	Quality Assurance
QC	Quality Control
LOI	Letter of Indent
QAP	Quality Assurance Procedure
ISS	International Standard Space
UPS	Uninterruptible Power Supply

Copyright VCS Quality Services Private Limited – All rights reserved

Digitally signed by RACHNA SHUKLA
Date: 2025.03.13 12:53:14 IST

CONTENTS

1.0 INTRODUCTION 4
2.0 SCOPE OF WORK 4
3.0 ROLE OF CONTRACTOR 5
4.0 CO-ORDINATION WITH TPIA 5
5.0 INVOLVEMENT OF TPIA 5

Copyright VCS Quality Services Private Limited – All rights reserved

Digitally signed by RACHNA SHUKLA
Date: 2025.03.13 12:53:14 IST

1.0 INTRODUCTION

The objective is to specify the role of Third-Party Inspection Agency (TPIA) appointed by Contractor for supply items and appointed by Owner for construction work.

The Contractor will appoint an independent approved Third-Party Inspection Agency (TPIA) whose role shall be to witness, review and certify all quality related issues for supply of material. The TPIA shall ensure that all quality related requirements during manufacturing are strictly followed as per Owner/Owner's representative specifications and approved documents. Owner shall appoint its TPIA for witness, review and certification of all the construction activities.

This Standard Specification also indicates general quality control requirements for various activities pertaining to Gas Pipeline Projects and the extent of TPIA involvement as indicated in tender shall be binding on the contractor.

2.0 SCOPE OF WORK

2.1 Role of TPIA for Supply Items

TPIA, as appointed by the Contractor from Owner's approved list, shall witness, review and certify all quality related activities for supply of material for Mechanical, Civil, Electrical and Instrumentation system. The extent of TPIA involvement as a minimum is indicated in the various Quality Control Sheets attached with the tender document and shall be as per final approved QA/QC procedures or as per codes and standards, wherever applicable.

2.2 Role of Owner / Owner's Representative for Supply Items

For supply items, Owner / Owner's Representative reserves the right to carryout independent inspection / audit of the plant during manufacturing. The extent of inspection shall be at the discretion of Owner / Owner's Representative. All costs related to the same (excluding travel expenses) shall be borne by Contractor

2.3 Role of TPIA for Construction Activity

TPIA, as appointed and paid by Owner will be involved in all inspection, witness & certify construction work. The extent of TPIA involvement will be shown in the various Quality control sheets prepared by Contractor and approved by Owner/ Owner's representative.

Prior to commencement of any activity pertaining to construction at site, Owner/Owner's representatives shall get the documents reviewed by the TPIA.

2.4 The various Hold points' involvement as mentioned in various QC sheets is indicative minimum. However, actual involvement shall be decided by Owner/Owner's Representative during review of documents, and Contractor shall be bound by the same. Contractor shall also submit the calibration certificates of all the equipment/instruments, which are part of manufacturing/Inspection & testing for TPIA review TPIA shall also be responsible to check /witness the

Copyright VCS Quality Services Private Limited – All rights reserved

Digitally signed by RACHNA SHUKLA
Date: 2025.03.13 12:53:14 IST

necessary calibration of such equipment/Instruments during visit to contractor's works.

3.0 ROLE OF CONTRACTOR

Contractor shall have to carry out all necessary inspections and testing which are indicated in approved documents and shall have to provide all necessary latest tools & tackles, measuring instruments and facilities, which are required by the TPIA/Owner /Owner's representatives and all necessary assistance to carryout inspection/testing at contractor's cost. Owner/Owner's representative shall have a right to inspect any activity.

4.0 CO-ORDINATION WITH TPIA

Contractor on award of the Contract/LOI shall submit the detail procurement and construction schedules within fifteen (15) days to Owner/Owner's representative for their approval. The detail item wise Manufacturing schedule indicating dates and location of manufacturer works shall be submitted by the Contractor within One (1) week from the date of issue of their internal Indent /Purchase order to sub vendor.

Contractor shall inform in writing minimum One (1) week in advance to inform the Owner/Owner's representative for Inspection Notice/Call. All coordination among Owner/Owner's representative/TPIA and Contractor's/ Vendor's works shall be the responsibility of Contractor. In case the Contractor fails to honour its inspection calls/notice, contractor has to reimburse all costs incurred by the Owner/Owner representative at actual.

Inspection of site construction activities shall be coordinated on daily basis and adequate notice shall be given to Owner/Owner's representative to mobilize TPIA, this shall be as per site conditions and requirements.

5.0 INVOLVEMENT OF TPIA

5.1 The Minimum requirements are indicated in the Quality Control Tables attached in tender document.

5.2 Civil

All procured items required for execution activities for civil works should satisfy the following conditions:

- It should be of reputed make having proven record of being successfully used in similar works earlier and as per approval by Owner / Owner's Representative.
- All materials shall be of standard quality and shall be procured from renowned sources / manufacturers approved by Owner/ Owner's representative.
- All tests of the materials as specified by the relevant codes should be carried out by the contractor in an approved laboratory and the test reports should be

Copyright VCS Quality Services Private Limited – All rights reserved

Digitally signed by RACHNA SHUKLA
Date: 2025.03.13 12:53:14 IST

duly authenticated by the laboratory and should be submitted to TPIA for his approval. If so desired by Owner/ Owner's representative, tests shall be conducted in his presence or in presence of his authorized nominee.

- Quality and acceptance of materials not covered under general technical specifications shall be governed by relevant codes.
- The Contractor shall submit manufacturer's test reports on quality and suitability of any material procured from them and their recommendations on storages/ application/ workmanship etc. for the intended use. Submission of manufacturer's test reports does not restrict Owner/ representative from asking fresh test results from an approved laboratory of the actual materials supplied even from an approved manufacturer.
- Contractor shall furnish the QAP for all supply and construction works.

5.3 Electrical

All procured items for required execution activities for electrical works should satisfy the following conditions:

- Contractor shall furnish the QAP for Panels, Cables, UPS etc. for Owner's review.
- QA Plan will commence at the instigation of the requisition and follow through to equipment acceptance thus ensuring total conformity to the specifications.
- Type test certificates of similar equipment shall be provided.
- Routine tests shall be carried out on the panels, Cables, UPS, Flame proof equipment and other items as per ISS.
- Owner/Owner's Representative reserve the right to witness routine acceptance tests at the manufacturer works as indicated in QAP & ISS.
- Owner/Owner's Representative will witness the routine tests on Panels, UPS at the manufacturer works prior to despatch, to prove compliance with specifications.
- Owner/Owner's Representative shall carry out the inspection of the erection of equipment and witness the testing & commissioning of the equipment at site and approve the test certificates.

5.4 Instrumentation

All procured items for required execution activities for Instrumentation works should satisfy the following conditions:

- Contractor shall furnish the quality assurance procedure for field instruments and cables for review of Owner/ Owner's representative.
- QAP will commence at the instigation of the requisition and follows through to

Copyright VCS Quality Services Private Limited – All rights reserved

Digitally signed by RACHNA SHUKLA
Date: 2025.03.13 12:53:14 IST

equipment acceptance. Thus, ensuring total conformity to the specifications.

- Type test certificates of similar equipment shall be provided.
- Owner/Owner's Representative shall carryout the inspection of erection of the equipment and witness the testing and commissioning and approve the certificates.

Copyright VCS Quality Services Private Limited – All rights reserved

Digitally signed by RACHNA SHUKLA
Date: 2025.03.13 12:53:14 IST

ENERGISING QUALITY

VCS QUALITY SERVICES PVT.LTD.

STANDARD SPECIFICATION
FOR
SEAMLESS (SMLS) LINE PIPE (ONSHORE)

VCS-PP-SS-2036

Rev. No	Date	Prepared By	Checked By	Approved By	Authorized By
03	26.06.2022	RP	MC	HK	GW
02	28.01.2020	MB	MD	AD	SK

UNCONTROLLED COPY	:	If printed
CONTROLLED COPY	:	If in soft and signed

Copyright VCS Quality Services Private Limited – All rights reserved

Digitally signed by RACHNA SHUKLA
Date: 2025.03.13 12:53:14 IST

REVISION RECORD						
Rev.	**Revision Date**	**Prepared by**	**Checked by**	**Approved by**	**Authorized by**	**Revision Description**
00	10.10.2017					Issued as standard Specification
		MD	SM	AD	SK	
01	24.09.2019					Revised based on API 6d 24th edition
		JV	MC	AD	SK	
02	28.01.2020					Document formatting, numbering updated from SS-PL-033 to VPC-PP-SS-2036 other detail update as marked
		MB	MC	AD	SK	
03						VCS QMS Integration
	26.06.2022	RP	MC	HK	GW	

Copyright VCS Quality Services Private Limited – All rights reserved

Digitally signed by RACHNA SHUKLA
Date: 2025.03.13 12:53:14 IST

CONTENTS

1. SCOPE 4

3. NORMATIVE REFERENCES 4

6. PIPE GRADE, STEEL GRADE AND DELIVERY CONDITION 4

8 MANUFACTURING 5

9 ACCEPTANCE CRITERIA 5

10 INSPECTION 11

11 MARKING 14

12 COATINGS AND THREAD PROTECTORS 15

13 RETENTION OF RECORDS 15

14 PRODUCTION REPORT 15

15 INSPECTION OF FIELD TESTS & WARRANTY 16

Copyright VCS Quality Services Private Limited – All rights reserved

Digitally signed by RACHNA SHUKLA
Date: 2025.03.13 12:53:14 IST

1. SCOPE

This specification establishes the minimum requirements for the manufacture of seamless steel line pipe for onshore service in accordance with the requirements of API (American Petroleum Institute) Specification 5L, Forty-Fifth Edition, 2012 and makes restrictive amendments to API Specification 5L. Unless modified and/or deleted by this specification, the requirements of API Specification 5L shall remain applicable.

The sections, paragraphs and annexes contained herein have the same numbering as that of API Spec 5L in order to facilitate reference. Additional requirements, which are not specified in API Spec 5L, have also been numbered and marked as "(New)".

The coverage by this specification is limited to line pipe to be used in onshore pipelines transporting non-sour hydrocarbons in liquid or gaseous phase. The product specification level for line pipe to be supplied as per this specification shall be "PSL 2".

The Manufacturer shall have a valid license to use API Monogram in accordance with the requirements of Specification 5L, Forty-Fifth Edition, 2012 for line pipe as Product Specification Level PSL 2.

1.1 Pipe Size

This Specification shall be applied to line pipe of size 4.5” OD thru 16" OD (both sizes included).

3. NORMATIVE REFERENCES

The latest edition (edition enforce at the time of issue of enquiry) of following additional references are included in this specification:

ASTM

ASTM E112: Standard Test Methods for Determining Average Grain size

6. PIPE GRADE, STEEL GRADE AND DELIVERY CONDITION

6.1 PIPE GRADE AND STEEL GRADE

6.1.2 Line pipe supplied to this specification shall conform to Product Specification Level 2 (PSL2) as given in Table 1 of this specification and consists of an alpha or alphanumeric designation that identifies the strength level of the pipe. The steel name (designating a steel grade), linked to the chemical composition of the steel, additionally includes a suffix that consists of a single letter (N or Q) that identifies the delivery condition as per Table 3 of this specification.

Table 1 of API Spec 5L stands replaced by Table 1 of this specification.

Table 1- Pipe grades, steel grades and acceptable delivery conditions

PSL	Delivery Condition	Pipe grade! steel grade [a,b]
PSL -2	Normalized	BN, X42N, X46N, X52N
	Quenched and tempered	BQ, X42Q, X46Q, X52Q, X56Q, X60Q, X65Q & X70Q
a Deleted b The suffix (N or Q) for PSL 2 grades belongs to steel grade		

Copyright VCS Quality Services Private Limited – All rights reserved

Digitally signed by RACHNA SHUKLA
Date: 2025.03.13 12:53:14 IST

6.2 DELIVERY CONDITION

6.2.2 The delivery condition for starting material shall be in accordance with Table 1 of this specification.

8 MANUFACTURING

8.1 PROCESS OF MANUFACTURE

Pipe furnished to this specification shall be manufactured in accordance with the applicable requirements and limitations given in Table 2 of API Spec 5L and Table 3 of this specification.

Table 3 of API Spec 5L stands replaced by Table 3 of this specification.

Table 3 - Acceptable manufacturing routes for PSL 2 pipe

Type of Pipe	Starting Material	Pipe forming	Pipe heat treatment	Delivery condition
SMLS	Ingots, Bloom or billet	Normalising forming	None	N
		Hot forming	Normalising or Quenched & Tempered	N or Q
		Hot forming and cold finishing		N or Q

8.3 STARTING MATERIAL

8.3.2 Line pipe furnished to this specification shall be made from steel produced in basic oxygen or electric arc furnace. Steel shall be made by continuous casting only.

8.3.3 The steel used for manufacture of pipe shall be fully killed and fine grained with ASTM grain size number 7 or finer as per ASTM E 112.

8.9 COLD SIZING AND COLD EXPANSION

8.9.1 Pipes furnished to this specification shall be non-expanded.

8.11 JOINTERS

8.11.1 Jointers on pipes are not permitted.

9 ACCEPTANCE CRITERIA

9.2 CHEMICAL COMPOSITION

9.2.2 For pipes supplied as per this specification, the chemical composition of each heat of steel on product analysis shall be as given in Table 5 of this specification.

Table 5 of API Spec 5L stands replaced by Table 5 of this specification.

Copyright VCS Quality Services Private Limited – All rights reserved

Digitally signed by RACHNA SHUKLA
Date: 2025.03.13 12:53:14 IST

Table 5 - Chemical composition for pipe

Element	Mass fraction based upon heat and product analyses (%)	
C [b]	0.16	max.
Si	0.15 [m(new)]	min.
	0.40	max. (For Grade B to X46)
	0.45	max. (For Grade X52 to X70)
Mn [b]	1.20	max. (For Grade B to X42)
	1.40	max. (For Grade X46 to X70) for delivery condition N
	1.50	max. (For Grade X46 to X 56) for delivery condition Q
	1.60	max. (For Grade X60 to X70) for delivery condition Q
P	0.020	max.
S	0.010	max.
V	c	(For Grade B)
	0.05	max. (For Grade X42 to X52)
	0.07[g]	max. (For Grade X56)
	0.08[g]	max. (For Grade X60 to X70)
Nb	c	(For Grade B)
	0.05[g]	max. (For Grade X42 to X70)
Ti	0.04[g]	max. (For Grade B to X60)
	0.06[g]	max. (For Grade X65 & X70)
Al [n (new)]	0.07	max.
Cr	0.20	
Mo	0.10	
Cu [o (new)]	0.35	
Ni [o (new)]	0.20	
N [n (new)]	0.012	
B	0.0005	

a Based upon product analysis as per clause 9.2.4 and 9.2.5 of API Spec 5L, the CE_{Pcm} limits apply if C ≤ 0.12% and CE_{IIW} limits apply if C > 0.12%. For pipes of all grades, sizes and wall thicknesses, Carbon Equivalent shall comply with the following limits:

$CE_{Pcm} \leq 0.20$ %

$CE_{IIW} \leq 0.40$ %

Boron content shall be considered in CE_{Pcm} formula even if it is less than 0.0005%.

b Deleted

c Nb + V ≤ 0.06%

d Deleted

e Deleted

f Deleted

g Nb + V + Ti ≤0.15%

h Deleted.

I Deleted

Copyright VCS Quality Services Private Limited – All rights reserved

Digitally signed by RACHNA SHUKLA
Date: 2025.03.13 12:53:14 IST

j Deleted
k Deleted
l Deleted
(New) m Minimum for Si is not applicable for Al killed steel.
(New) n Al/N shall be minimum 2 (not applicable to titanium-killed steel or titanium-treated steel).
(New) o Cu + Ni ≤0.40%

9.2.3 For heat analysis and product analysis, all the elements listed in Table 5 of this specification shall be analysed and reported, even if those are not purposely added but are present as residuals only.

If alloying elements other than those specified in Table 5 of this specification are added to the steel, the limits of the additional components shall be agreed with the Purchaser.

9.3 TENSILE PROPERTIES

9.3.2 The finished pipe (after all heat treatment & sizing operations) shall conform to the requirements of Table 7 of API Spec 5L and as modified herein.

The actual yield strength shall be as close as possible to the specified minimum yield strength (SMYS) but in no case it shall exceed the limits specified here under:

API Spec 5L Grade	Permissible in excess of SMYS, MPa (psi)
Up to and including X46	131 (19,000)
X52 to X60	125 (18,000)
X65 to X70	120 (17,400)

The ratio of body yield strength and body tensile strength of each test pipe on which yield strength and ultimate tensile strength are determined, shall not exceed 0.90.

The minimum elongation of base metal shall be determined in accordance with the formula given in foot note (f) of Table 7 of API Spec 5L, however, minimum elongation shall be at least 20% for t ≤ 12.7 mm and 22% for t > 12.7 mm.

8 CVN IMPACT TEST FOR PSL 2 PIPE

9.8.1 General

9.8.1.2 From the set of three Charpy V-notch impact test pieces, only one is allowed to be below the specified average absorbed energy value and shall meet the minimum single absorbed energy value requirement as specified in Table 8 of this specification.

9.8.2 Pipe body tests

9.8.2.1 The average (set of three test pieces) absorbed energy value (KvT) for each pipe body test shall be as specified in Table 8 of this specification, based upon full sized test pieces at a test temperature of 0°C(32°F) or at a lower test temperature as specified in the Purchase Order/Material Requisition /Data sheets.

Table 8 of API Spec 5L stands replaced by Table 8 of this specification.

Copyright VCS Quality Services Private Limited – All rights reserved

Digitally signed by RACHNA SHUKLA
Date: 2025.03.13 12:53:14 IST

Table 8 - CVN absorbed energy requirements

for pipe body of PSL 2 pipe

Pipe Grade	Full-size CVN absorbed energy (KvT) [a.b] [J]	
	Average	Minimum
B	40	33
X42	40	33
X46	40	33
X52	40	33
X56	40	33
X60	42	35
X65	45	38
X70	50	40

a. The required KvL (longitudinal direction test pieces) values shall be 50% higher than the required KvT values.
b. Testing shall be performed at a test temperature of 0° C (32°F) or at a lower temperature as specified in the Purchase Order/ Material Requistion/ Data sheet

Copyright VCS Quality Services Private Limited – All rights reserved

Digitally signed by RACHNA SHUKLA
Date: 2025.03.13 12:53:14 IST

9.8.2.2 The minimum average (set of three test pieces) shear fracture area shall be at least 85 % with one minimum value of 75%, based at a test temperature of 0 °C (32 °F) or at a lower test temperature as specified in the Purchase Order /Material Requisition/Data sheet.

9.10 SURFACE CONDITIONS, IMPERFECTIONS AND DEFECTS

9.10.1 General

9.10.1.2 All pipes shall be free from cracks, sweats, leaks and slivers. Pipe containing such defects shall be treated in accordance with clause C.3 b) or C.3 c) of API Spec 5L.

9.10.4 Laminations

Any lamination or inclusion either extending into the face or bevel of the pipe or present within 50 mm from pipe ends shall be classified as defect. Pipes that contain such defects shall be rejected or cut back until no lamination or inclusion is present at the pipe ends and shall be treated in accordance with clause C.3 b) or C.3 c) of API Spec 5L.

9.10.5 Geometric deviations

9.10.5.2 For dents, the length in any direction shall be ≤ 0.5 D and the depth, measured as the gap between the extreme point of the dent and the prolongation of the normal contour of the pipe, shall not exceed the following:

a) 2 mm for types of dents and not encroaching upon the minimum specified wall thickness

Dents that exceed the above specified limits shall be considered as defect and shall be treated in accordance with clause C.3 b) or C.3 c) of API Spec 5L. Acceptable cold-formed dents with sharp-bottom gouges shall be treated in accordance with clause C.2 of API Spec 5L & as modified in this specification.

9.10.6 Hard Spots

Any hard spot larger than 50 mm (2.0 in) in any direction and hardness greater than 248HV 10 shall be classified as defect and treated in accordance with clause C.3 of API Spec 5L.

9.10.7 Other surface imperfection

Other surface imperfections found by visual inspection or non-destructive inspection shall be investigated, classified and treated as follows:

a) Imperfections that have a depth ≤ 0.05 t and do not encroach on the minimum specified wall thickness shall be classified as acceptable imperfections and shall be treated in accordance with Clause C.1 of this specification.

b) Imperfections that have a depth > 0.05 t and do not encroach on the minimum specified wall thickness shall be classified as defects, and shall be dressed-out by grinding in accordance with Clause C.2 of API Spec 5L and as modified in this specification or shall be treated in accordance with clause C.3 of API Spec 5L.

c) Imperfections that have a depth > 0.05 t and encroach on the minimum specified wall thickness shall be classified as defects and treated in accordance with clause C.3 of API Spec 5L.

9.11 DIMENSIONS, MASS AND TOLERANCES

9.11.3 Tolerances for diameter, wall thickness, length and straightness

9.11.3.1 The diameter and out-of-roundness shall be within the tolerances given in Table 10 of this specification.

Table 10 of API Spec 5L stands replaced by Table 10 of this specification.

Copyright VCS Quality Services Private Limited – All rights reserved

Digitally signed by RACHNA SHUKLA
Date: 2025.03.13 12:53:14 IST

Table 10 - Tolerances for diameter and out-of-roundness

Specified outside Diameter (D) mm (inch)	Diameter tolerances [d]		Out-of-roundness	
	Pipe except the end [a]	Pipe end [a,b,c]	Pipe except the end [a]	Pipe end [a,b,c]
114.3 (4 1/2) ≤ D ≤ 168.3 (6.625)	± 0.0075 D	-0.4 mm to + 1.6mm	0.020D	2.0mm
168.3 (6.625) < D ≤ 273.1 (10.750)		±0.005 D, but maximum of ± 1.6mm		2.0mm
273.1 (10.750) < D ≤ 406.4 (16)				3.0mm

a. The pipe end includes a length of 100 mm at each of the pipe extremities.
b. Deleted
c. The diameter tolerance and out-of-roundness tolerance shall apply on inside diameter. The inside diameter, based on circumferential measurement, shall be calculated as ID = (D – 2t).
d. For determining compliance to the diameter tolerances, the pipe diameter is defined as the circumference of the pipe in any circumferential plane divided by Pi (π).
e(new). Out-of-roundness tolerances apply to maximum and minimum diameters as measured with bar gage, caliper, or device measuring actual, maximum and minimum diameters.

9.11.3.2 In addition to API requirements, the wall thickness of each pipe shall be checked along the circumference at both ends and at the mid location of pipe body at 12 O' clock, 3 O' clock, 6 O' clock and 9 O' clock positions. The tolerances for wall thickness shall be as given in Table 11 of this specification.

Table 11 of API Spec 5L stands replaced by Table 11 of this specification.

Table 11- Tolerances for wall thickness

Wall thickness (mm)	Tolerances c, d (mm)
t < 10.0	+0.225 t -0.05 t
10.0 ≤ t < 25.0	+0.20 t -0.05 t
t ≥ 25.0	+5.00 -1.25

a Deleted
b Deleted
c The + ve tolerance for wall thickness does not apply to the weld area.
d See 9.13.2 of API Spec 5L and as modified herein for additional restrictions.

9.11.3.3 All pipes shall be supplied with length between 11.5 m and 12.5 m. However pipe with length between 10.0 m and 11.5 m can also be accepted for a maximum of 5% of the ordered quantity. The minimum average length of the entire ordered quantity in any case shall be 12.0 m. Overall length tolerance shall be (-) Zero and (+) One pipe length to complete the ordered quantity. Table 12 of API Spec 5L stands deleted.

9.11.3.4 The tolerances for straightness shall be as follows:

a) The total deviation from a straight line over the entire pipe length shall not exceed 12 mm, as shown in Figure I of API Spec 5L.

Copyright VCS Quality Services Private Limited – All rights reserved

Digitally Signed by RACHNA SHUKLA
Date: 2025.03.13 12:53:14 IST

b) The local deviation from straight line in 1.0 m (3.0 ft) portion at each pipe end shall be ≤ 3.0 mm (0.120 in), as shown in Figure 2 of API Spec 5L.

9.12 FINISH OF PIPE ENDS

9.12.5 Plain ends

9.12.5.6

(New) During removal of inside burrs at the pipe ends, care shall be taken not to remove excess metal and not to form an inside cavity on bevel. Removal of excess metal beyond the minimum wall thickness as indicated in clause 9.11.3.2 of this specification shall be a cause for re-bevelling. In case root face of bevel is less than that specified, the pipe ends shall be re-bevelled and rectification by filing or grinding shall not be done.

9.12.5.7

(New) Bevel Protectors

Both pipe ends of each pipe shall be provided with metallic or high impact plastic bevel protectors as per Manufacturer's standard. Bevel protectors shall be of a design such that they can be re-used by coating applicator for providing on externally anti-corrosion coated pipes subsequent to coating of line pipe.

10 INSPECTION

10.1 TYPES OF INSPECTION AND INSPECTION DOCUMENTS

10.1.3 Inspection documents for PSL 2 pipes

10.1.3.1 Inspection certificate 3.2 in accordance with EN 10204 shall be issued for each dispatched pipe by Purchaser's authorized representative.

10.2 SPECIFIC INSPECTION

10.2.1 Inspection frequency

10.2.1.2 For PSL 2 pipe, the inspection frequency shall be as given in Table 18 of this specification.

Table 18 of API Spec 5L stands replaced by Table 18 of this specification.

Table 18 - Inspection frequency of pipe

Sl. no.	Type of inspection	Frequency of inspection
1	Heat analysis [a]	One analysis per heat of steel
2	Product analysis [b]	Two pipes per lot (maximum 100 pipes) per heat
3	Tensile testing of the pipe body	Two pipes per lot (maximum 100 pipes) per heat
4	CVN impact testing of the pipe body	Once per test unit of not more than 100 pipes
5	Vickers hardness testing of Pipe body	Once per test unit of not more than 50 pipes

Copyright VCS Quality Services Private Limited – All rights reserved

Digitally Signed by RACHNA SHUKLA
Date: 2025.03.13 12:53:14 IST

6	Hydrostatic testing	Each pipe
7	Visual inspection	Each pipe
8	Pipe diameter and out-of-roundness for pipe [d]	Each pipe
9	Wall thickness measurement [d]	Each pipe
10	Straightness [d]	At least 3 times per operating shift (12 hours maximum)
11	Other dimensional testing	Random testing, with the details left to the discretion of the manufacturer
12	Weighing of pipe	Each pipe shall be measured and recorded
13	Non-destructive inspection	In accordance with Annex E of API Spec 5L and as modified herein
14	Length	Each length of pipe shall be measured and recorded

a. Where the steel mill is not a part of an integrated pipe mill, heat analysis shall be reported by the Manufacturer prior to start of pipe production.
b. Pipes selected shall be such that one at the beginning of the heat and one at the end of the heat are also represented.
c. Deleted.
d. Measurement shall be recorded at least 3 times per operating shift (12 hrs maximum).
e. "Test unit" is as defined in clause 4.62 of API Spec 5L.

10.2.2 Samples and test pieces for product analysis

Samples shall be taken, and test pieces prepared, in accordance with ISO 14284 or ASTM E1806. Samples used for product analysis shall be taken from finished pipes only.

10.2.3 Samples and test pieces for mechanical tests

10.2.3.1 General

In addition to API Spec 5L requirements, samples and test pieces for various types of tests shall be taken from Figure 5 a) of API Spec 5L and Figure 10.2.4.8.1 of this specification, whichever is applicable, and as given in Table 20 of this specification.

Table 20 of API Spec 5L stands replaced by Table 20 of this specification.

Table 20 - Number, orientation and location of test pieces per sample for mechanical tests

Sample Location	Type of test	Number, Orientation and location of test pieces per sample [a]
Pipe body	Tensile	1L, 1T[b]

Copyright VCS Quality Services Private Limited – All rights reserved

Digitally signed by RACHNA SHUKLA
Date: 2025.03.13 12:53:14 IST

	CVN	3T
	Hardness	1T
a See figure 5 (b) of API Spec 5L for an explanation of the symbols used to designate orientation and location. b The transverse tensile tests shall be carried out on pipes of D ≥ 219.1 mm.		

10.2.3.2 Test pieces for the tensile test

Tensile test specimens shall be taken from finished pipes only. Heating or artificial ageing of tests pieces is not permitted.

Transverse test pieces shall have a round cross-section and shall be obtained from non - flattened samples prepared according to ASTM A370.

Longitudinal tensile tests shall be carried out on a strip specimen representing full wall thickness of the pipe prepared according to ASTM A370.

10.2.3.3 Test pieces for the CVN impact test

In addition to the API Spec 5L requirements, following shall also be applicable:

The test pieces shall be prepared in accordance with ASTM A370. Non-flattened test pieces shall be used. Test specimen shall be taken from the body of the finished pipe only. The axis of the notch shall be perpendicular to the pipe surface.

Charpy V-notch impact testing shall be performed on full-sized test pieces. However, if preparation of full size test piece is not possible, then standard sub-sized test pieces shall be prepared as per ASTM A370.

In case of lower pipe sizes wherein preparation of transverse sub-sized specimen is not possible, CVN impact testing shall be carried out on longitudinal test specimen [see Note 'a' of Table 8 of this specification].

10.2.3.8 Samples for hardness tests

(New) Samples for hardness tests shall be taken transverse to the pipe body [see Figure 5 a) key 2] from the pipe ends.

10.2.4 Test methods

10.2.4.3 CVN impact test

The Charpy test shall be carried out in accordance with ASTM A370.

10.2.4.8 Hardness test

In addition to the requirements of API Spec 5L, following shall also be applicable:

Vickers hardness tests shall be carried out in accordance with ISO 6507-1. The resulting Vickers hardness value at any point shall not exceed 248 HV_{10}. Hardness test locations shall be as shown in Figure 10.2.4.8.1 of this specification.

Modalities of retest shall be in accordance with clause 10.2.12.7 of API Spec 5L.

Copyright VCS Quality Services Private Limited – All rights reserved

Digitally signed by RACHNA SHUKLA
Date: 2025.03.13 12:53:14 IST

10.2.6 Hydrostatic test

10.2.6.1 Test pressure shall be held for a minimum period of 15 seconds for all sizes and grades of pipes.

10.2.6.2 In addition to the requirements of API Spec 5L, following shall also be applicable:

The pressure gauge used for hydrostatic testing shall have a minimum range of 1.5 times and maximum range of 4 times the test pressure. The test-pressure measuring device shall be calibrated by means of a dead-weight tester only. The test configuration shall permit bleeding of trapped air prior to pressurization of the pipe.

10.2.6.5 The test pressure for all sizes and grades of pipe shall be such that hoop stress (fibre stress) generated is at least 95% of SMYS, computed based on the Equation (6) indicated in clause 10.2.6.5 of API Spec 5L. Table 26 of API Spec 5L stands deleted.

10.2.7 Visual inspection

10.2.7.1 Each pipe shall be visually examined for entire external surface and internal surface to the extent feasible and shall be free of defects in finished condition. Visual examination shall be carried out in a sufficiently illuminated area; minimum 1000 1x. If required additional lights shall be used to obtain good contrast and relief effect between imperfections and backgrounds.

10.2.8 Dimensional testing

10.2.8.1 Diameter measurements shall be made with a circumferential tape only.

10.2.8.7 The measuring equipment requiring calibration or verification under the provisions of API Spec 5L shall be calibrated with manual instruments at least once per operating shift (12 hours maximum). Such calibration records shall be furnished to Purchaser's Representative on request.

10.2.10 Non-destructive inspection

Non-destructive inspection shall be performed in accordance with Annex E of API Spec 5L and as modified herein.

10.2.11 Reprocessing

This clause of API Spec 5L stands cancelled.

10.2.12 Retesting

10.2.12.1 Recheck analyses

Modalities of recheck analysis shall be as per API Spec 5L as applicable to the lot being tested (see Table 18 of this specification). However, during individual testing, each pipe shall be fully analysed to meet the requirements of Table 5 of this specification.

11 MARKING

11.1 GENERAL

11.1.1 Pipe manufactured in accordance with this specification shall be marked by the manufacturer as per the requirements of API Spec 5L and as modified herein. Marking shall be in English language and International System (SI) of Units.

11.1.5(New) Marking shall also include Purchase Order number, item number, pipe number and heat number.

11.2 Pipe markings

Copyright VCS Quality Services Private Limited – All rights reserved

Digitally signed by RACHNA SHUKLA
Date: 2025.03.13 12:53:14 IST

11.2.1 k) (New). Actual length in metres and actual pipe weight in kg shall be marked

11.2.2 c) (New). Paint used for stencil marking shall withstand a temperature up to 250°C expected to be experienced during further external anti-corrosion coating operations of line pipe by coating applicator.

11.2.3 The pipe number shall be placed by cold rolling or low stress dot marking or vibro-etching on the outside surface of the pipe at an approximate distance of 50 mm from both ends. In case of non-availability of either cold rolling or low stress dot marking facility in pipe mill, an alternative marking scheme of a permanent nature may be proposed by the Manufacturer

11.2.7 A colour code band shall be marked on inside surface of finished pipe for identification of pipes of same diameter but different wall thickness, as indicated in the Purchase Order.

The colour code band shall be 50 mm wide and shall be marked at a distance of 150 mm from the pipe ends.

12 COATINGS AND THREAD PROTECTORS

12.1.1 Unless otherwise specified in the Purchase Order, the pipes shall be delivered bare, free of any trace of oil, stain, grease and paint. Varnish coating shall be applied on the marking area. Bevels shall be free of any coating.

13 RETENTION OF RECORDS

In addition to the records indicated in API Spec 5L, the Manufacturer shall retain the records of all additional tests and calibration records mentioned in this specification including the hard copy records of ultrasonic testing carried out on pipe/coil as well as pipe ends.

14 PRODUCTION REPORT

(New) The Manufacturer shall provide one electronic copy and six hard copies of production report in English language indicating at least the following for each pipe. International system of units (SI) shall be adopted.

- Pipe number
- Heat number from which pipe is produced
- Pipe length and weight
- Pipe grade

The Manufacturer shall provide one electronic copy and six hard copies of acceptance certificates which shall include the results of all tests required as per this specification and performed on delivered material giving details of, but not limited to, the following:

- All test certificates as per clause 10.1.3 of API Spec 5L and as modified herein.
- Certified reports of dimensional inspection, surface imperfections & defects.
- Data on test failures, rejected heats/lots, etc.
- Information on production and shipping
- All other reports and results required as per this specification.

Copyright VCS Quality Services Private Limited – All rights reserved

Digitally Signed by RACHNA SHUKLA
Date: 2025.03.13 12:53:14 IST

The certificates shall be valid only when signed by the Purchaser's Representative. Only those pipes, which have been certified by the Purchaser's Representative, shall be dispatched from the pipe mill.

In the event of small quantities of pipes supplied against this specification, the production report may consist of only test certificates required as per clause 10.1.3 of API Spec 5L and as modified herein and other test reports/results required as per this specification.

15 INSPECTION OF FIELD TESTS & WARRANTY

(New) Purchaser shall be reimbursed by Manufacturer for any pipe furnished on this order that fails under field hydrostatic test if such failure is caused by a material/ manufacturing defect in the pipe. The reimbursement cost shall include pipe, labour and equipment rental for finding, excavating, cutting out and installation of replaced pipe in position. The field hydrostatic test pressure will not exceed that value which will cause a calculated hoop stress equivalent to 95 percent of specified minimum yield strength.

In case Manufacturer so desires, he will be advised at least two weeks in advance so that his Representative may witness the hydrostatic test in field, however, the testing and leak (if any) finding and repair operation shall not be postponed because of absence of the Manufacturer's Representative.

Copyright VCS Quality Services Private Limited – All rights reserved

Digitally signed by RACHNA SHUKLA
Date: 2025.03.13 12:53:14 IST

Annex B

Manufacturing Procedure Qualification for PSL 2 Pipe

B.1 INTRODUCTION

B.1.1 This annex specifies additional provisions that apply for the PSL 2 pipes ordered as per this specification.

B.1.2 Two lengths each of completely finished pipes from two different heats (i.e. a total of four pipe lengths) shall be selected at random for testing as per clause B.5.1 of this specification to verify that the manufacturing procedure results in the quality of pipes which are in complete compliance with this specification. The pipes thus tested shall be considered to be the test pipes required per heat or per lot as per relevant clauses of this specification.

These manufacturing procedure qualification tests (MPQT) shall be repeated upon any change in the manufacturing procedure as deemed necessary by Purchaser's Representative. The manufacturing procedure qualification tests shall be carried out on pipes for each wall thickness, each diameter and each grade of steel.

B.1.3 Verification of the manufacturing procedure shall be by qualification in accordance with clause B.3, B.4 and B.5 of API Spec 5L and as modified herein.

Note: In the event of small quantities of pipes ordered against this specification, like those for bends and other similar applications, as specifically called out in the Purchase Order, the manufacturing procedure qualification test as per clause B.5.1 of this specification shall not be carried out. Pipes in such case shall be accepted based on regular production tests.

B.3 CHARACTERISTICS OF THE MANUFACTURING PROCEDURE SPECIFICATION

Before pipe production commences, Manufacturing Procedure Specification (MPS) for manufacturing of pipes and Statistical process control charts shall be prepared by pipe manufacturer and submitted for approval of the Purchaser.

B.5 MANUFACTURING PROCEDURE QUALIFICATION TESTS (MPQT)

B.5.1 For the qualification of the manufacturing procedure, all tests & inspections specified in Table 18 and clause B.5.2 of this specification shall be conducted on all the pipes selected for testing as per clause B.1.2 of this specification.

B.5.2 The Manufacturer shall submit to Purchaser a report giving the results of all tests mentioned below. The report shall be agreed and signed by Purchaser's Representative, prior to start of regular production.

The various tests to be conducted on each pipe shall be as follows. The test method and acceptance values shall be as per this specification unless specified differently in this Annex.

a. **Visual Examination**

All pipes shall be examined visually for dimensional tolerances and apparent surface defects.

b. **Ultrasonic Examination**

The weld seam of all pipes shall be examined ultrasonically by automatic ultrasonic equipment.

Copyright VCS Quality Services Private Limited – All rights reserved

Digitally Signed by RACHNA SHUKLA
Date: 2025.03.13 12:53:14 IST

c. **Mechanical Properties**

The mechanical properties of all pipes shall be tested and shall meet the requirements of this specification. Purchaser's Representative will select the places in pipe from where the test pieces shall be extracted.

The following tests shall be conducted:

i. Tensile test

Tensile tests as per Table 20 and clause 10.2.3.2 of this specification shall be conducted on:

- Two (2) transverse test pieces for pipe of D ≥ 219.1 mm (8.625 inch):

- Two (2) longitudinal test pieces

ii. CVN impact testing

Four sets of three transverse specimens shall be extracted from base metal for CVN impact tests including fracture toughness testing. The specimen shall be tested at - 40°C, -10°C, 0°C, +20°C for shear area and absorbed energy to produce full transition curve. The value for shear area and absorbed energy at the test temperature specified in clause 9.8 and Table 8 of this specification respectively shall be complied with. For other temperatures, test values shall be for information only.

iii. Hardness test

Hardness test shall be conducted on selected pipes as per requirement of clause 10.2.4.8 of this specification.

In addition to the above tests, all the tests and inspections required to be conducted as per this specification shall be conducted on all the pipes selected for testing during MPQT.

Copyright VCS Quality Services Private Limited – All rights reserved

Digitally signed by RACHNA SHUKLA
Date: 2025.03.13 12:53:14 IST

Annex C

Treatment of surface imperfections and defects

C.1 TREATMENT OF SURFACE IMPERFECTIONS

Surface imperfection not classified as defect as per this specification shall be cosmetically dressed-out by grinding.

C.2 TREATMENT OF DRESSABLE SURFACE DEFECTS

C.2.3 Complete removal of defects shall be verified by local visual inspection and by suitable non-destructive inspection. To be acceptable, the wall thickness in the ground area shall be in accordance with clause 9.11.3.2 of this specification.

Copyright VCS Quality Services Private Limited – All rights reserved

Digitally signed by RACHNA SHUKLA
Date: 2025.03.13 12:53:14 IST

Annex E

Non-destructive inspection for other than sour service or offshore service

The Purchaser reserves the right to depute its Representative(s) to perform inspection and witness tests in all phases of manufacturing and testing starting from steelmaking to finished line pipe ready for shipment. Manufacturer shall comply with the provisions regarding inspection notice, plant access, compliance and rejection mentioned in the Annex Q (New) of this specification. The Manufacturer shall give the Purchaser reasonable notice of the starting date of normal production and the work schedule. Any action or omission on part of Purchaser's Representative shall not relieve the Manufacturer of his responsibility and obligation to supply material in strict accordance with this specification.

E.1 QUALIFICATION OF PERSONNEL

E.1.1 All personnel performing NOT activities shall be qualified in the technique applied, in accordance with latest edition of ISO 9712, ISO 11484 or ASNT No. ASNT-TC-IA or equivalent

All NDT shall be performed in accordance with written procedures. These procedures shall have prior approval of the Purchaser.

Inspector Qualification

Acceptable qualification for NOT inspectors shall be as specified below:

(i) For UT

For UT, at least one Level III qualified inspector shall be available to the mill for overall supervision. Level III inspectors shall be ASNT Level III or ACCP Professional Level III and certified in applicable method.

A level II inspector is required for shift supervision, manual weld inspection and calibration of all systems (both manual and automated).

(ii) For all other NDT methods

Evaluation of indications: Level II & Level III inspector

E.3 METHODS OF INSPECTION

E.3.1 General

E.3.1.2 All SMLS pipes shall be non-destructively inspected full length (100%) in accordance with applicable methods given in Table E.2 of API Spec 5L using automatic ultrasonic equipment in accordance with clause E.5 and as modified herein.

E.3.3 Pipe End Inspection - Welded Pipe

E.3.3.1 Pipe ends including weld at the pipe ends not covered by automatic ultrasonic equipment shall be inspected by manual ultrasonic equipment with same sensitivity and capability as automatic equipment, or, such non-inspected pipe end shall be cut-off. Records in accordance with E.5.4 of API Spec 5L shall be maintained.

E.3.3.2 Ultrasonic inspection in accordance with the method described in ISO 10893-8 shall be used to verify that the 50 mm (2.0 in) wide zone at each pipe end is free of any laminar imperfections in the circumferential direction.

E.3.3.3(New) Bevel face of each pipe end shall be magnetic particle inspected for the detection of laminar imperfections in accordance with ISO 10893-5

Copyright VCS Quality Services Private Limited – All rights reserved

Digitally signed by RACHNA SHUKLA
Date: 2025.03.13 12:53:14 IST

E.5 ULTRASONIC AND ELECTROMAGNETIC INSPECTION

E.5.1 Equipment

E.5.1.1 In addition to the API Spec 5L requirements, all automatic ultrasonic equipment shall have an alarm device, which continuously monitors the effectiveness of the coupling. The equipment for the automatic inspection shall allow the localization of both longitudinal and transverse defects corresponding to the signals exceeding the acceptance limits of the reference standard. The equipment shall be fitted with a paint spray or automatic marking device and alarm device for areas giving unacceptable ultrasonic indications. All ultrasonic testing equipment shall be provided with recording device.

E.5.2. Ultrasonic and electromagnetic inspection reference standards

E.5.2.1 The reference standard shall be, according to the cases, taken from the production to be controlled, and of such dimensions as to allow the static and dynamic calibration of the control system.

E.5.2.3 Reference standards

The primary reference sensitivity level shall be adjusted on the following reference reflectors:

Examination Type	Seamless
Lamination Detection	FBH (6.4mm)
Surface defect detection	Notch N5
Defect detection of body and pipe ends	Notch N5

Flat Bottomed Holes (FBH) for lamination detection shall have 6.4 mm (1/4inch) diameter and depth 0.5 t, where 't' is the specified wall thickness.

E.5.3 Instrument standardization

E.5.3.2 The instrument shall be calibrated with appropriate reference standard (refer E.5.2 of API Spec 5L and as modified herein) under the same inspection conditions of pipes of normal production at following intervals::

- Once at the beginning of each operating shift (12 hours maximum).
- Once in between of each operating shift i.e, 3 hrs to 4 hrs after the first
- Every time there is change in probes or working condition of the UT machine.
- Every time the running of the system gives rise to doubts on its efficiency.
- If during the calibration verification, it is found that notches or holes of the reference standard are not revealed or if the signals caused by notches and holes of the calibration samples do not switch on the automatic alarm or marking and selection device, all pipes already checked from the previous verification shall be re-inspected at manufacturer's cost.

E.5.5 Acceptance limits

E.5.5.2 For all examination types, indications exceeding the acceptance limit signals are unacceptable. For lamination detection in seamless pipe body and pipe ends, the acceptance limits shall be based on the lamination size and frequency as given below:

Copyright VCS Quality Services Private Limited – All rights reserved

Digitally Signed by RACHNA SHUKLA
Date: 2025.03.13 12:53:14 IST

Any lamination in the body of the pipe exceeding both of the following is considered a defect:

a) Greater than or equal to 12.0 mm in the minor dimension.

b) Greater than or equal to 5000 mm^2 in area.

E.5.6 Disposition of defects found by ultrasonic and electromagnetic inspection

Disposition of any imperfection in pipe/coil that produces an indication greater than the acceptable limits of this specification shall be classified as defect and shall be given disposition as specified in (e) or (f) of E.10 of API Spec 5L.

E.5.8 LAMINAR IMPERFECTIONS IN THE PIPE BODY

(New) The individual laminations exceeding the acceptance limits as given in clause E.5.5.1 of this specification shall be classified as defects.

Compliance with such requirements shall be verified by ultrasonic inspection in accordance with ISO 10893-8 amended as follows:

- The distance between adjacent scanning tracks shall be sufficiently small to ensure detection of minimum allowed imperfection size.

The minimum coverage during automatic inspection shall be ≥ 25 %of the pipe surface.

E.5.9 Suspect pipe

(New) Pipe giving rise to indications producing a trigger/ alarm condition as a result of the specified non-destructive inspection operation shall be deemed suspect. Locations showing indications above the acceptance limits during ultrasonic inspection shall be re-examined by radiography. If no defects are located during re-examination, the original findings may be ignored. Additional scanning may be requested by the Purchaser Representative to check questionable areas.

E.7 RESIDUAL MAGNETISM

E.7.2 The longitudinal magnetic field shall be measured on all sizes of pipes. Measurement on pipe in stack shall not be considered valid. Such measurements shall be taken on the root face or square cut face of finished plain-end pipes.

E.7.3 Measurements shall be made using Hall- effect gaussmeter only.

E.7.4 Measurements shall be made on each end of a pipe for 5% of the pipes produced but at least once per 4 hr per operating shift (12 hrs maximum).

E.7.6 Four readings shall be taken approximately 90° apart around the circumference of each end of the pipe. The average of the four readings shall not exceed 2.0 mT (20 gauss) and no single reading shall exceed 2.5 mT (25 gauss). All residual magnetism measurements shall be recorded.

E.10 DISPOSITION OF PIPES CONTAINING DEFECTS

c) The repaired area shall be 100% rechecked by magnetic particle or ultrasonic inspection to ensure complete removal of defects. However, for repair of cosmetic type of defects, MPI may not be conducted if so directed by Purchaser's Representative on case to case basis. The pipes having a thickness less than the minimum allowed in accordance with this specification, after repair by grinding shall be treated for disposition in accordance with (e) or (f) of clause E.10 of API Spec 5L.

Copyright VCS Quality Services Private Limited – All rights reserved

Digitally signed by RACHNA SHUKLA
Date: 2025.03.13 12:53:14 IST

E.11 SUPPLEMENTARY NON-DESTRUCTIVE INSPECTION

(New)

E.11.1 (new) Pipe shall be 100% ultrasonically inspected for the detection of transverse imperfections and inclined embedded defects in accordance with ISO 10893-10 acceptance level U2/C.

E.11.2(new) Pipe shall be full-body inspected using the flux leakage method in accordance with ISO 10893-3 acceptance level F2 for the surface testing of the pipes for longitudinal and transverse imperfections.

Copyright VCS Quality Services Private Limited – All rights reserved

Digitally signed by RACHNA SHUKLA
Date: 2025.03.13 12:53:14 IST

Annex Q (New)

Purchaser Inspection

Q.1 INSPECTION NOTICE

Advance notice shall be given by the manufacturer prior to the start of production to the purchaser to inspect/witness the manufacturing activities including tests.

Q.2 PLANT ACCESS

The inspector representing the purchaser shall have unrestricted access, at all times while work of the contract of the purchaser is being performed, to all parts of the manufacturer's works that will concern the manufacture of the pipe ordered. The manufacturer shall afford the inspector all reasonable facilities to satisfy the inspector that the pipe is being manufactured in accordance with this specification. All inspections should be made at the place of manufacture prior to shipment, unless otherwise specified on the purchase order, and shall be so conducted as not to interfere unnecessarily with the operation of the works.

Q.3 COMPLIANCE

The manufacturer is responsible for complying with all of the provisions of this specification. The purchaser may make any investigation necessary to be satisfied of compliance by the manufacturer and any reject any material that does not comply with this specification.

Q.4 REJECTION

If the Purchaser Representative rejects pipes repeatedly for any recurring cause, this shall be adequate reason to refuse final inspection of subsequent pipes until the cause has been investigated and corrective action taken by the Manufacturer.

Copyright VCS Quality Services Private Limited – All rights reserved

Digitally signed by RACHNA SHUKLA
Date: 2025.03.13 12:53:14 IST

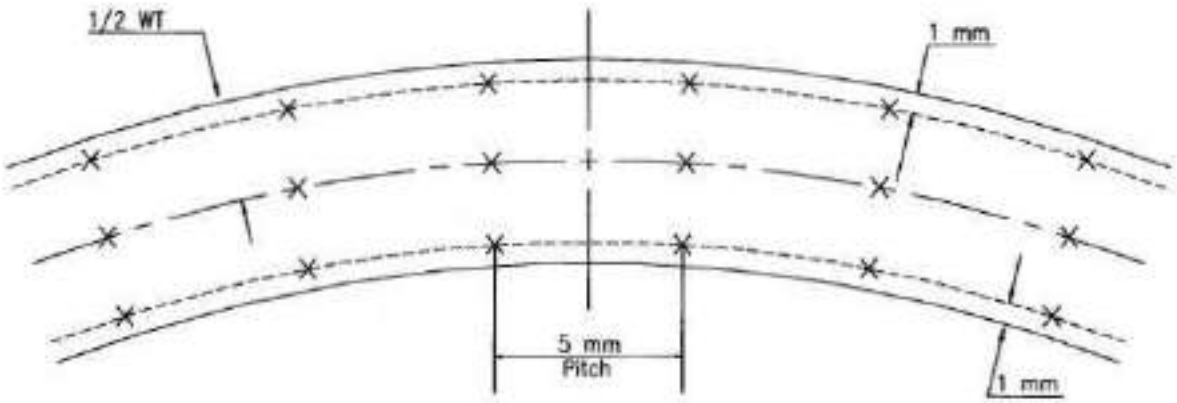

Notes:

1. Number of hardness measurement required on each specimen shall be min. 12.

FIGURE: 10.2.4.8.1

LOCATIONS FOR HARDNESS MEASUREMENT

Copyright VCS Quality Services Private Limited – All rights reserved

Digitally signed by RACHNA SHUKLA
Date: 2025.03.13 12:53:14 IST

VCS QUALITY SERVICES PVT. LTD.

STANDARD SPECIFICATION
FOR
DOCUMENTATION REQUIREMENTS
FROM SUPPLIERS

VCS – SS – PP - 2043

Rev. No	Date	Prepared By	Checked By	Approved By	Authorized By
01	30.07.2022	RKP	MC	HK	GW
00	20.07.2020	MB	MC	AD	SK

UNCONTROLLED COPY	:	If printed
CONTROLLED COPY	:	If in soft and signed

Copyright VCS Quality Services Private Limited – All rights reserved

Digitally signed by RACHNA SHUKLA
Date: 2025.03.13 12:53:14 IST

REVISION RECORD						
Rev.	**Revision Date**	**Prepared by**	**Checked by**	**Approved by**	**Authorized by**	**Revision Description**
00	20.07.2020					
		MB	MC	AD	SK	
01	30.07.2022					VCS QMS Integration
		RKP	MC	HK	GW	

Copyright VCS Quality Services Private Limited – All rights reserved

Digitally signed by RACHNA SHUKLA
Date: 2025.03.13 12:53:14 IST

Abbreviations:

DCI	:	Document Control Index
edms	:	Electronic Document Management System
FOA	:	Fax of Acceptance
HOD	:	Head of Division / Department
IC	:	Inspection Certificate
IRN	:	Inspection Release Note
ITP	:	Inspection and Test Plan
LOA	:	Letter of Acceptance
MOU	:	Memorandum of Understanding
MR	:	Material Requisition
PO	:	Purchase Order
PR	:	Purchase Requisition
PVC	:	Polyvinyl Chloride
QMS	:	Quality Management System
TPIA	:	Third Party Inspection Agency
URL	:	Universal Resource Locator

Copyright VCS Quality Services Private Limited – All rights reserved

Digitally signed by RACHNA SHUKLA
Date: 2025.03.13 12:53:14 IST

CONTENTS

1.0 SCOPE..... 4

2.0 DEFINITIONS 4

3.0 REFERENCE DOCUMENTS 4

4.0 DOCUMENTATION REQUIREMENTS 4

Attachments

Format for completeness of Final Documentation

Annexure-1

Copyright VCS Quality Services Private Limited – All rights reserved

Digitally signed by RACHNA SHUKLA
Date: 2025.03.13 12:53:14 IST

1.0 SCOPE

This specification establishes the Documentation Requirements from Suppliers. All documents/data against the PO / PR / MR shall be developed and submitted to OWNER by the suppliers for review / records, in line with this specification.

2.0 DEFINITIONS

2.1 Supplier

For the purpose of this specification, the word "SUPPLIER" means the person(s), firm, company or organization who is under the process of being contracted by OWNER for delivery of some products (including service). The word is considered synonymous to bidder, contractor or vendor.

2.2 Owner

Owner means the owner of the project for which services / products are being purchased and includes their representatives, successors and assignees.

3.0 REFERENCE DOCUMENTS

VCS-SS-PP-2044 Standard Specification for Quality Management System Requirements from Vendors

4.0 DOCUMENTATION REQUIREMENTS

4.1 Documents/Data to be Submitted by the Supplier

4.1.1 The Supplier shall submit the documents and data against the PO/PR/MR as per the list given in respective PO/PR/MR.

4.1.2 Review of the supplier drawings by PMC/ OWNER would be only to review the compatibility with basic designs and concepts and in no way absolve the supplier of his responsibility/contractual obligation to comply with PR requirements, applicable codes, specifications and statutory rules/regulations. Any error/deficiency noticed during any stage of manufacturing/execution/installation shall be promptly corrected by the supplier without any time and cost implications, irrespective of comments on the same were received from OWNER during the drawing review stage or not.

4.1.3 Unless otherwise specified, submission of documents for Review/Records shall commence as follows from the date of Fax of Intent / Letter of Intent/ Fax of Acceptance (FOA)/ Letter of Acceptance (LOA):

QMS - 1 week

Drawing/Document Control Index - 2 weeks

Other Documents/Drawings - As per approved Drawing/Document Control Index/Schedule

4.1.4 Documents as specified in PO/PR/MR are minimum requirements. Supplier shall submit any other document/data required for completion of the job as per OWNERs instructions.

4.2 Style and Formatting

4.2.1 All Documents shall be in ENGLISH language and in M.K.S System of units.

Copyright VCS Quality Services Private Limited – All rights reserved

Digitally signed by RACHNA SHUKLA
Date: 2025.03.13 12:53:14 IST

4.2.2 Before forwarding the drawings and documents, contractor shall ensure that the following information are properly mentioned in each drawing:

Purchase Requisition Number

Name of Equipment / Package

Equipment / Package Tag No.

Name of Project

Client

Drawing / Document Title

Drawing / Document No.

Drawing / Document Revision No. and Date

4.3 Review and Approval of Documents by Supplier

4.3.1 The Drawing/Documents shall be reviewed, checked, approved and duly signed/stamped by supplier before submission. Revision number shall be changed during submission of the revised supplier documents and all revisions shall be highlighted by clouds. Whenever the supplier requires any sub-supplier drawings to be reviewed by OWNER, the same shall be submitted by the supplier after duly reviewed, approved and stamped by the supplier. Direct submission of sub-supplier's drawings without contractor's approval shall not be entertained.

4.4 Document Category

4.4.1 Review Category

Following review codes shall be used for review of supplier Drawings/Documents:

Review Code A	-	No comments. Proceed with manufacture/ fabrication as per the document.
Review Code B	-	Proceed with manufacture/fabrication as per commented document. Revised document required.
Review Code C	-	Document does not conform to basic requirements as marked. Resubmit for review
Review Code D	-	Document Rejected
Review Code F	-	For information
R	-	Document is retained for Records. Proceed with manufacture/fabrication.
V	-	Void

Copyright VCS Quality Services Private Limited – All rights reserved

Digitally signed by RACHNA SHUKLA
Date: 2025.03.13 12:53:14 IST

4.5 Methodology for Submission of Documents to PMC/Owner

4.5.1 Document Control Index (DCI)

Supplier shall create and submit Document Control Index (DCI) for review based on PO/PR/MR along with schedule date of submission of each drawing/document on OWNERs eDMS. The DCI shall be specific with regard to drawing/document no. and the exact title. Proper sequencing of the drawings/documents should be ensured in scheduled date of submission on of the job as per OWNER.

4.5.2 Submission of Drawings/Documents

Drawings/documents and data shall be uploaded on the eDMS Portal as per DCI

4.5.3 Statutory Approvals

Wherever approval by any statutory body is required to be taken by Supplier, the Supplier shall submit copy of approval by the authority to PMC/OWNER.

4.5.4 Details of Contact Persons of Supplier

After placement of order supplier shall assign a Project Manager for that order. The details are to be filled online through the portal. The details include e-mail address, mailing address, telephone nos., fax nos. and name of Project Manager. All the system generated emails pertaining to that order shall be sent to the assigned Project Manager.

4.5.5 Schedule and Progress Reporting

Supplier shall submit monthly progress report and updated procurement, engineering and manufacturing status (schedule vs. actual) every month, beginning within 2 weeks from FOA/LOA . In case of exigencies, PMC/Owner can ask for report submission as required on weekly/fortnightly/adhoc basis depending upon supply status and supplier shall furnish such reports promptly without any price implication. Format for progress report shall be submitted by the Supplier during kick off meeting or within one week of receiving FOA/LOA, whichever is earlier.

4.5.6 Quality Assurance Plan/Inspection and Test Plan

Inspection and test plans (ITP) attached if any, to the MR/PR are to be followed.

However for cases wherein ITPs have not been attached with MR/PR, Supplier shall submit within one week of receiving FOA/LOA, the Quality Assurance Plan for manufacturing, covering quality control of critical bought out items/materials, inspection& testing at various stages of production, quality control records and site assembly &testing as may be applicable to the specific order and obtain approval from OWNER /PMC/ third party inspection agency, as applicable.

For Package equipment contracts, the supplier shall prepare a list of items/ equipment's and their inspection categorization plan for all items included in the scope of supply immediately after receipt of order and obtains approval for the same from OWNER. The

Copyright VCS Quality Services Private Limited – All rights reserved

Digitally signed by RACHNA SHUKLA
Date: 2025.03.13 12:53:14 IST

items shall be categorized into different categories depending upon their criticality for the scope of inspection of TPIA and/or OWNER/ OWNER appointed PMC.

4.5.7 Inspection Release Note (IRN)/ Inspection Certificate (IC)

IRN/ IC shall be issued by PMC Inspector/ third party inspection agency on the basis of successful inspection, review of certificates as per specifications & agreed quality plan (as applicable) and only after all the drawings/documents as per DCI are submitted and are accepted under review code-A or code R. Supplier shall ensure that necessary documents/manufacturing and test certificates are made available to PMC/TPIA as and when desired.

Note: Non fulfilling above requirement shall result into appropriate penalty or withholding of payment as per conditions of PO/PR/MR.

Transportation Plan for Over Dimensional Consignments (ODC), if any, shall be submitted within 2 weeks of receiving FOA/LOA, for approval. Consignment with parameters greater than following shall be considered as over dimensional.

Dimensions: 4 meters width x 4 meters height x 20 meters length

Weight: 32 MT

4.6 Final Documentation

4.6.1 As Built Drawings

Shop changes made by Supplier after approval of drawings under `Code A' by OWNER/OWNER appointed PMC and deviations granted through online system , if any, shall be marked in hard copies of drawings which shall then be stamped 'As-built' by the supplier. These 'As-built' drawings shall be reviewed and stamped by PMC Inspector/TPIA also. Supplier shall prepare scanned images files of all marked — up 'As — built drawings. Simultaneously Supplier shall incorporate the shop changes in the native soft files of the drawings also.

4.6.2 As Built Final Documents

As built final documents shall be submitted as listed in PO/PR/MR.

4.6.3 Packing/Presentation of Final Documents

Final Documents shall be legible photocopies in A4, A3 size only. Drawings will be inserted in plastic pockets (both sides transparent, sheet thickness minimum 0.1 mm) with an extra strip of 12 mm wide for punching so that drawings are well placed.

Final Documentation shall be bound in Hard board Plastic folder(s) of size 265 mm x 315 mm (101 /2 inch x 12 1 /2 inch) and shall not be more that 75 mm thick. It may be of several volumes and each volume shall have a volume number, index of volumes and index of contents of that particular volume. Where number of volumes are more, 90mm thickness can be used. Each volume shall have top PVC sheet of minimum 0.15mm thick duly fixed and pressed on folder cover and will have 2 lever clips. In case of imported items documents, 4 lever clips shall also be accepted. All four corners of folders shall be properly metal clamped. Indexing of contents with page numbering must be incorporated by supplier. Spiral/Spico bound documents shall not be acceptable. As mentioned above,

Copyright VCS Quality Services Private Limited – All rights reserved

Digitally signed by RACHNA SHUKLA
Date: 2025.03.13 12:53:14 IST

books should be in hard board plastic folders with sheets punched and having 2/4 lever clips arrangement.

Each volume shall contain on cover a Title Block indicating package Equipment Tag No. & Name, PO/Purchase Requisition No., Name of Project and Name of Customer. Each volume will have hard front cover and a reinforced spine to fit thickness of book. These spines will also have the title printed on them. Title shall include also volume number (say 11 of 15) etc.

4.6.4 Submission of Soft Copies

Supplier shall submit to OWNER, the scanned images files as well as the native files of

Drawings / documents, along with proper index.

In addition to hard copies, Supplier shall submit electronic file (CD-ROM) covering soft

copies of all the final drawings and documents, all text documents prepared on computer, scanned images of all important documents (not available as soft files), all relevant catalogues, manuals available as soft files (editable copies of drawings/text documents, while for catalogues/manuals/proprietary information and data, PDF files can be furnished).

All the above documents shall also be uploaded on the OWNERs eDMS portal.

4.6.5 Completeness of Final Documentation

Supplier shall get the completeness of final documentation verified by PMC appointed TPIA and attach the Format for Completeness of Final Documentation Format duly signed by OWNER/ OWNER appointed PMC/ Inspector or TPIA as applicable to the document folder.

Copyright VCS Quality Services Private Limited – All rights reserved

Digitally signed by RACHNA SHUKLA
Date: 2025.03.13 12:53:14 IST

ANNEUXRE-1

COMPLETENESS OF FINAL DOCUMENTATION

Name of Supplier/Contractor :

Customer :

Project :

OWNER's Job No. :

Purchase Order No./

Contract No. :

Purchase Requisition No./

Tender No. : Rev. No. :

Name of the Work/

Equipment :

Tag. No. :

Supplier's/ Contractor's

Works Order No. :

Certified that the Engineering Documents/ Manufacturing & Test Certificates submitted by the supplier is complete in accordance with the Vendor Data Requirements of Purchase Requisition.

Signature :..... Signature:.....

Date :..... Date:.....

Name :..... Name:.....

Designation :..... Designation:.....

Department :..... Department:.....

Supplier/Contractor **OWNER/PMC/TPIA**

Copyright VCS Quality Services Private Limited – All rights reserved

Digitally signed by RACHNA SHUKLA
Date: 2025.03.13 12:53:14 IST

VCS QUALITY SERVICES PVT. LTD.

STANDARD SPECIFICATION
FOR
QUALITY MANAGEMENT SYSTEM
REQUIREMENT FROM VENDORS

VCS – SS – PP - 2044

Rev. No	Date	Prepared By	Checked By	Approved By	Authorized By
01	30.07.2022	RKP	MC	HK	GW
00	20.07.2020	MB	MC	AD	SK

UNCONTROLLED COPY	:	If printed
CONTROLLED COPY	:	If in soft and signed

Copyright VCS Quality Services Private Limited – All rights reserved

Digitally signed by RACHNA SHUKLA
Date: 2025.03.13 12:53:14 IST

REVISION RECORD

Rev.	Revision Date	Prepared by	Checked by	Approved by	Authorized by	Revision Description
00	20.07.2020					
		MB	MC	AD	SK	
01	30.07.2022					VCS QMS Integration
		RKP	MC	HK	GW	

Copyright VCS Quality Services Private Limited – All rights reserved

Digitally signed by RACHNA SHUKLA
Date: 2025.03.13 12:53:14 IST

Abbreviations:

CV	:	Curriculum Vitae
ISO	:	International Organization for Standardization
MR	:	Material Requisition
PO	:	Purchase Order
PR	:	Purchase Requisition
QA	:	Quality Assurance
QMS	:	Quality Management System

Copyright VCS Quality Services Private Limited – All rights reserved

Digitally signed by RACHNA SHUKLA
Date: 2025.03.13 12:53:14 IST

CONTENTS

1.0 SCOPE 4
2.0 DEFINITIONS 4
3.0 REFERENCE DOCUMENTS 4
4.0 QUALITY MANAGEMENT SYSTEM - GENERAL 4
5.0 QUALITY SYSTEM REQUIREMENTS 4
6.0 AUDITS 6
7.0 DOCUMENTATION REQUIREMENTS 7

Copyright VCS Quality Services Private Limited – All rights reserved

Digitally signed by RACHNA SHUKLA
Date: 2025.03.13 12:53:14 IST

1.0 SCOPE

This specification establishes the Quality Management System requirements to be met by BIDDER for following purpose:

- QMS requirements to be met by suppliers/contractors after award of work/ during contract execution.

2.0 DEFINITIONS

2.1 Bidder

For the purpose of this specification, the word "BIDDER" means the person(s), firm, company or organization who is under the process of being contracted by Owner for delivery of some products (including service). The word is considered synonymous to supplier, contractor or vendor.

2.2 Project Quality Plan

Document tailored from Standard Quality Management System Manual of BIDDER, specifying how the quality requirements of the project will be met.

2.3 Owner

Owner means the owner of the project for which services / products are being purchased and includes their representatives, successors and assignees.

3.0 REFERENCE DOCUMENTS

VCS-SS-PP-2043 Standard Specification for Documentation Requirements from Suppliers

4.0 QUALITY MANAGEMENT SYSTEM — GENERAL

Unless otherwise agreed with PMC / Owner, the BIDDER proposed quality system shall fully satisfy all relevant requirements of ISO 9001 "Quality Management Systems - Requirements." Evidence of compliance shall be current certificate of quality system registration to ISO 9001 or a recent compliance audit recommending registration from a certification agency. The quality system shall provide the planned and systematic control of all quality related activities for execution of contract. Implementation of the system shall be in accordance with BIDDER'S Quality Manual and PROJECT specific Quality Plan.

5.0 QUALITY SYSTEM REQUIREMENTS

5.1 BIDDER shall prepare and submit for review / record, Project Quality Plan / Quality Assurance Plan for contracted scope / job. The BIDDER'S Quality Plan shall address all of the applicable elements of ISO 9001, identify responsible parties within BIDDER'S organization, for the implementation / control of each area, reference the applicable procedures used to control / assure each area, and verify the documents produced for

Copyright VCS Quality Services Private Limited – All rights reserved

Digitally signed by RACHNA SHUKLA
Date: 2025.03.13 12:53:14 IST

each area. The Project Quality Plan shall necessarily define control or make reference to the relevant procedures, for design and engineering, purchase, documentation, record control, bid evaluation, inspection, production/manufacturing, preservation, packaging and storage, quality control at construction site, pre-commissioning, commissioning and handing over (as applicable) in line with contract requirement and scope of work.

5.2 BIDDER shall identify all specified or implied statutory and regulatory requirements and communicate the same to all concerned in his organization and his sub contractor's organization for compliance.

5.3 BIDDER shall deploy competent and trained personnel for various activities for fulfilment of PO / contract. BIDDER shall arrange adequate infrastructure and work environment to ensure that the specification and quality of the deliverable are maintained.

5.4 BIDDER shall do the quality planning for all activities involved in delivery of order. The quality planning shall cover as minimum the following:

- Resources
- Product / deliverable characteristics to be controlled.
- Process characteristics to ensure the identified product characteristics are realized
- Identification of any measurement requirements, acceptance criteria
- Records to be generated
- Need for any documented procedure

The quality planning shall result into the quality assurance plan, inspection and test plans (ITPs) and job procedures for the project activities in the scope of bidder.

These documents shall be submitted to PMC/Owner for review/approval, before commencement of work.

5.5 Requirements for sub-contracting / purchasing of services specified in contract / tender shall be adhered to. In general, all outsourced items will be from approved vendors of OWNER. Wherever requirements are not specified, or approved sub vendors do not exist, the sub-contractor shall establish and maintain a system for purchasing / sub-contracting to ensure that purchased product / service conforms to specified requirements. Criteria for selection of sub-contractor, evaluation, re-evaluation, maintenance of purchasing data and verification of purchased product (subcontractor services), constitute important components of this requirement.

5.6 BIDDER shall plan and carry production and service provision under controlled conditions. Controlled conditions shall include, as applicable the availability of information that describes the characteristics of the product the availability of work instructions the use of suitable equipment the availability and use of monitoring and measuring devices the implementation of monitoring and measurement the implementation of release, delivery and post-delivery activities.

Copyright VCS Quality Services Private Limited – All rights reserved

5.7 BIDDER shall validate any processes for production and service provision where resulting output cannot be verified by subsequent monitoring and measurement. This includes any process where deficiencies become apparent only after the product is in use or service has been delivered.

5.8 BIDDER shall establish a system for identification and traceability of product /deliverable throughout product realization. Product status with respect to inspection and testing requirements shall be identified.

5.9 BIDDER shall identify, verify, protect and safeguard PMC / Owner property (material / document) provided for use or incorporation into the product. If any OWNER/ PMC property is lost, damaged or otherwise found to be unsuitable for use, this shall be reported to the OWNER/ PMC.

5.10 BIDDER shall ensure the conformity of product / deliverable during internal processing and delivery to the intended destination. Requirements mentioned in the tender shall be adhered to.

5.11 BIDDER shall establish system to ensure that inspection and testing activities are carried out in line with requirements. Where necessary, measuring equipment's shall be calibrated at specified frequency, against national or international measurement standards; where no such standard exists, the basis used for calibration shall be recorded. The measuring equipment's shall be protected from damage during handling, maintenance and storage.

5.12 BIDDER shall ensure effective monitoring, using suitable methods, of the processes involved in production and other related processes for delivery of the scope of contract.

5.13 BIDDER shall monitor and measure the characteristics of the product/deliverable to verify that product requirement has been met. The inspection (stage as well as final) by BIDDER and OWNER / Owner personnel shall be carried out strictly as per the ITPs forming part of the contract. Product release or service delivery shall not proceed until the planned arrangements have been satisfactorily completed, unless otherwise approved by relevant authority and where applicable by Owner / PMC.

5.14 BIDDER shall establish and maintain a documented procedure to ensure that the product which does not conform to requirements is identified and controlled to prevent its unintended use or delivery.

5.15 All non-conformities (NCs) / deficiencies found by the BIDDER'S inspection /surveillance staff shall be duly recorded, including their disposal action shall be recorded and resolved suitably. Effective corrective and preventive action shall be implemented by the BIDDER so that similar NCs including deficiencies do not recur.

5.16 All deficiencies noticed and reported by PMC / OWNER shall be analysed by the BIDDER and appropriate corrective and preventive actions shall be implemented. BIDDER shall intimate PMC / OWNER of all such corrective and preventive action implemented by him.

Copyright VCS Quality Services Private Limited – All rights reserved

5.17 BIDDER should follow the standards, specifications and approved drawings. Concessions/Deviations shall be allowed only in case of unavoidable circumstances. In such situations Concession/deviation request must be made by the BIDDER through online system of OWNER/ PMCs eDMS.

5.18 BIDDER shall have documented procedure for control of documents.

5.19 All project records shall be carefully kept, maintained and protected for any damage or loss until the project completion, then handed over to PMC / Owner as per contract requirement (VCS-SS-PL-0047 Specification for Documentation Requirements from Suppliers), or disposed as per relevant project procedure.

6.0 AUDITS

BIDDER shall plan and carry out the QMS audit for the job. Quality audit programme shall cover design, procurement, construction management and commissioning as applicable including activities carried out by sub-vendors and sub-contractors. This shall be additional to the certification body surveillance audits carried out under BIDDER'S own ISO 9001 certification scheme.

The audit programmes and audit reports shall be available with bidder for scrutiny by PMC / OWNER. PMC or OWNER representative reserves the right to attend, as a witness, any audit conducted during the execution of the WORKS.

In addition to above OWNER, PMC and third party appointed by PMC/Owner may also perform Quality and Technical compliance audits. BIDDER shall provide assistance and access to their systems and sub-contractor / vendor systems as required for this purpose. Any deficiencies noted shall be immediately rectified by BIDDER.

7.0 DOCUMENTATION REQUIREMENTS

BIDDER shall submit following QMS documents immediately after award of work (Within one week) for record / review by PMC/ Owner.

- Organization chart (for complete organization structure and for the project)
- Project Quality Plan/Quality Assurance Plan
- Job specific Inspection Test Plans, if not attached with PR
- Job Procedures
- Inspection/Test Formats

In addition to above QMS documents, following documentation shall be maintained by the BIDDER for submission to PMC / Owner on demand at any point of time during execution of the project.

- Quality Manual
- Certificate of approval for compliance to ISO: 9001 standards
- Procedure for Control of Non-conforming Product

Copyright VCS Quality Services Private Limited – All rights reserved

- Procedure for Control of Documents
- Sample audit report of the QMS internal and external audits conducted during last one year
- Customer satisfaction reports from at least 2 customers, during the last one year
- Project QMS audit report
- Technical audit reports for the project
- Corrective action report on the audits

Documents as specified above are minimum requirements. BIDDER shall submit any other document/data required for completion of the job as per PMC/Owner instructions.

Copyright VCS Quality Services Private Limited – All rights reserved

Digitally signed by RACHNA SHUKLA
Date: 2025.03.13 12:53:14 IST

VCS QUALITY SERVICES PVT. LTD.

STANDARD SPECIFICATION

FOR

PLUG VALVES

VCS – SS – PP - 2051

Rev. No	Date	Prepared By	Checked By	Approved By	Authorized By
00	03.05.2022	SR	MC	HK	HK

UNCONTROLLED COPY	:	If printed
CONTROLLED COPY	:	If in soft and signed

Digitally signed by RACHNA SHUKLA
Date: 2025.03.13 12:53:14 IST

ABBREVIATIONS:

ASME	American Society of Mechanical Engineers
ASTM	American Society for Testing and Materials
API	American Petroleum Institute
BHN	Brinell Hardness Number
DN	Nominal Size
HAZ	Heat Affected Zone
LC	Lock Close (valve locked in full close position)
LO	Lock Open (valve locked in full open position)
MSS-SP	Manufacturers Standardization Society - Standard Practice
NDT	Non Destructive Testing
NPS	Nominal Pipe Size
RTJ	Ring Type Joint
SSPC	Steel Structures Painting Council
MPI	Magnetic Particle Inspection
DP	Dye Penetrant

Copyright VCS Quality Services Private Limited – All rights reserved

Digitally signed by RACHNA SHUKLA
Date: 2025.03.13 12:53:14 IST

CONTENTS

1.0 SCOPE 4

2.0 REFERENCE DOCUMENTS 4

3.0 MATERIALS 5

4.0 DESIGN AND CONSTRUCTION REQUIREMENTS 6

5.0 INSPECTION AND TESTS 10

6.0 TEST CERTIFICATES 12

7.0 PAINTING 12

8.0 MARKING & SHIPMENT 13

9.0 SPARES AND ACCESSORIES 13

10.0 DOCUMENTATION 13

Copyright VCS Quality Services Private Limited – All rights reserved

Digitally signed by RACHNA SHUKLA
Date: 2025.03.13 12:53:14 IST

1.0 SCOPE

This Specification covers the minimum requirements for design, manufacture, testing and supply of carbon steel plug valves of size DN 50 mm (2") and above and ANSI pressure rating Class 150# thru 900# for use in onshore pipeline systems handling non-sour hydrocarbons in liquid or gaseous phase including Liquefied Petroleum Gas (LPG).

2.0 REFERENCE DOCUMENTS

2.1 All valves shall be manufactured and supplied in accordance with the American Petroleum Institute (API) Specification 6D, Latest Edition with additions and modifications as indicated in the following sections of this specification.

2.2 Reference has also been made in this specification to the latest edition (edition enforce at the time of issue of enquiry unless specified otherwise) of the following Codes, Standards and Specification.

AMERICAN SOCIETY OF MECHANICAL ENGINEERS (ASME)

B31.3	:	Process Piping.
B31.4	:	Pipeline Transportation System for Liquid Hydrocarbon & Other Liquids.
B 31.8	:	Gas Transmission and Distribution Piping Systems.
B16.5	:	Pipe Flanges and Flanged Fittings.
B16.10	:	Face to Face and End to End Dimensions of Valves.
B 16.25	:	Butt Welding Ends.
B 16.34	:	Valves-Flanged, Threaded and Welding Ends.
B 16.47	:	Large Diameter Steel Flanges.
Section VIII	:	Boiler and Pressure Vessel Code - Rules for Construction of Pressure Vessels.
Section IX	:	Welding and Brazing Qualifications.

AMERICAN PETROLEUM INSTITUTE (API)

1104	:	Specification for Welding Pipelines and Related Facilities.

AMERICAN SOCIETY FOR TESTING AND MATERIALS (ASTM)

A370	:	Standard Test Methods and Definitions for Mechanical Testing of Steel Products.

Copyright VCS Quality Services Private Limited – All rights reserved

Digitally signed by RACHNA SHUKLA
Date: 2025.03.13 12:53:14 IST

B 733 : Auto catalytic (Electroless) Nickel - Phosphorus Coatings on Metal.

MANUFACTURERS STANDARDIZATION SOCIETY (MSS)

SP-6 : Standard Finishes for Contact Faces of Pipe Flanges and Connecting – End Flanges of Valves and Fittings.

SP-44 : Steel Pipeline Flanges.

STEEL STRUCTURES PAINTING COUNCIL (SSPC)

VIS-I : Visual Standard.

2.3 In case of conflict between the requirements of this specification, API 6D and the Codes, Standards and Specifications referred in clause 2.2 above, the requirements of this specification shall govern.

Order of precedence shall be as follows:

- Data Sheets
- This Specification
- API 6D Specification
- Other Referred Codes & Standards
- Manufacturer's Standard

3.0 MATERIALS

3.1 The Material for Construction of major components of the Plug valves shall be as indicated in Valve Data Sheet. Other components shall be as per Manufacturer's standard (suitable for the service conditions indicated in the Valve Data Sheet) and shall be subject to approval by Company.

All process-wetted parts, metallic and non-metallic, and lubricants shall be suitable for the service specified by the Company. Manufacturer shall confirm that all wetted parts are suitable for treated water/ seawater environment, which may be used during field testing.

3.2 Carbon steel used in the manufacture of valves shall be fully killed.

3.3 The carbon equivalent (CE) of valve end connections which are subject to further field welding by Company shall not exceed 0.45 on check analysis for each heat of steel used, as calculated by the following formula:

$$CE = C + \frac{Mn}{6} + \frac{Cr + Mo + V}{5} + \frac{Cu + Ni}{15}$$

3.4 CHARPY V-NOTCH TEST REQUIREMENTS

3.4.1 For valves specified to be used for Gas service or LPG service, Charpy V-notch test, on each heat of base material shall be conducted as per API 6D, for all pressure containing parts such as body,

Copyright VCS Quality Services Private Limited – All rights reserved

Digitally signed by RACHNA SHUKLA
Date: 2025.03.13 12:53:14 IST

end flanges and welding ends as well as bolting material for pressure containing parts. Unless specified otherwise, the Charpy Impact test shall be conducted at 0^0C or minimum design temperature indicated in valve data sheet / MR, whichever is lower. Test procedure shall conform to ASTM A 370. The average absorbed energy value of three full sized specimens shall be 27 J. The minimum impact energy value of any one specimen of the three specimens analyzed as above shall not be less than 22 J.

3.4.2 When Low Temperature Carbon Steel (LTCS) materials are specified in Valve Data Sheet or offered by Manufacturer, the Charpy V-notch test requirements of applicable material standard shall be complied with.

3.5 HARDNESS TEST REQUIREMENTS

For Valves specified to be used for Gas service or LPG service, Hardness test shall be carried out as per ASTM A 370 for each method of manufacture and each heat of steel used in the manufacture of valves. A full thickness cross section shall be taken for this purpose and the maximum hardness of the materials of valve components such as base material of body and principal parts of the valve such as plug, stem, etc shall not exceed 248 HV_{10}.

3.6 ELECTROLESS PLATING REQUIREMENTS

For all such valves where Carbon Steel is used as plug material, the plug shall have 75 micrometers (0.003 inches) thick Electroless Nickel Plating (ENP) as per ASTM B 733 with following classification:

- SC2, Type II, Class 2.

The hardness of plating shall be minimum 50 RC.

Manufacturer shall ensure that the adhesive strength of plating is sufficient so as to prevent peeling of plating during operation of the valve.

4.0 DESIGN AND CONSTRUCTION REQUIREMENTS

4.1 GENERAL

Valve design shall meet the requirements of API Specification 6D and shall be suitable for the service conditions indicated in the Valve Data Sheet. The valve body and other pressure containing parts shall be designed in compliance with ASME Boiler & Pressure Vessel Code, Section VIII, Div1. Allowable stress requirements shall comply the provisions of ASME B31.3. Also corrosion allowance indicated in Valve Data Sheet shall be considered in valve design. However, the minimum wall thickness shall not be less than the minimum requirement of ASME B16.34. The manufacturer shall have valid license to use API monogram on valves manufactured as per API 6D.

All process-wetted parts, metallic and non-metallic, shall be suitable for the fluids and service specified by the Purchaser

4.2 VALVE PATTERN

Copyright VCS Quality Services Private Limited – All rights reserved

Digitally signed by RACHNA SHUKLA
Date: 2025.03.13 12:53:14 IST

Valve pattern area shall be as specified in the following table:-

ANSI Pressure Rating	SIZE RANGE, DN MM (INCH)	PATTERN
Class 150 #	50-100 (2- 4)	Short
	150-300 (6 – 12)	Regular
	350(14) & above	Venturi
Class 300 #	50 -100(2 – 4)	Short
	150 - 250 (6 -10)	Regular
	300 (12) & above	Venturi
Class 600 #	50 - 250 (2 – 10)	Regular
	300 (12) & above	Venturi
Class 900 #	50 - 250 (2 – 10)	Regular
	300 (12) & above	Venturi

4.3 PLUG DESIGN

The valves shall have an inherent feature to ensure that under line pressure cannot cause taper locking of plug/ plug movement in to the taper, i.e. valves shall be of “Pressure-Balanced” design type.

4.4 Cover shall be bolted to the valve body and screwed connections are not acceptable.

4.5 Soft seats to achieve a seal between plug and body are not permitted.

4.6 SEALANT INJECTION REQUIREMENT

All valves shall have the provision for secondary sealant injection under full line pressure for seat and stem seals. All sealant injection connection shall be provided with an internal non-return valve. Valve design shall have a provision (e.g. Ball Type Check Valve/ Needle Valve) to replace the sealant injector fitting under full line pressure. Location and arrangement of sealant injection points shall be as per Fig - 4.6. Valves shall have vent and drain connections as per API 6D.

4.7 Valves shall be designed to withstand a sustained internal vacuum of at least 1 (one) milli-bar in both open and closed positions.

4.8 Valve design shall ensure repair of gland packing under full line pressure.

4.9 VALVE ENDS

a. Valve ends shall be either flanged/ or butt welded or one end flanged and one end butt welded as indicated in the Valve Data Sheet. Flanges of the flanged end cast/ forged body valves shall be integrally cast/ forged with the body of the valve. Face to face/ end to end dimensions shall conform to API 6D. Face-to-face and end-to-end dimensions for valve sizes not specified in API 6D shall be in accordance with ASME B 16.10. Face-to-face and end-to-end

Copyright VCS Quality Services Private Limited – All rights reserved

Digitally signed by RACHNA SHUKLA
Date: 2025.03.13 12:53:14 IST

dimensions not shown in API 6D or in ASME B 16.10 shall be as per Manufacturer Standard and shall be subject to approval by Company.

b. Flanged ends, if specified, shall have flanges as per ASME B16.5 for valve sizes up to DN 600 mm (24") excluding DN 550 mm (22") and as per MSS-SP-44/ ASME B 16.47 Series A for valve sizes DN 550 mm (22") and for DN 650 mm (26") and above. Flange face shall be either raised face or ring joint type (RTJ) as indicated in Valve Data Sheet. Flange face finish shall be serrated or smooth as indicated in Valve Data Sheet. In case of RTJ flanges, the groove hardness shall be minimum 140 BHN.

c. Butt weld end preparation shall be as per ASME B 16.25. The thickness of the pipe to which the valve has to be welded shall be as indicated in the Valve Data Sheet. Valves shall be without transition pups. In case difference exists between thickness of welding ends of valve and connecting pipe, the welding ends of valve shall have bevel preparation as per ASME B31.4 or ASME B31.8 as applicable.

4.10 POSITION INDICATORS

Valve shall be provided with Plug position indicator and stops of rugged construction at the fully open and fully closed positions.

4.11 VALVE INSTALLATION

Valves shall be suitable for either buried or above ground installation as indicated in Valve Data Sheet, material Requisition & P&IDs

4.12 LOCKING DEVICES

When indicated in Material Requisition, valves shall have locking devices to lock the valve either in full open (LO) or full close (LC) positions. Locking devices shall be permanently attached to the valve operator and shall not interfere with operation of the valve.

4.13 Valves of size NPS 8" and larger shall be equipped with lifting lugs. Tapped holes and eye bolts shall not be used for lifting lugs.

4.14 STEM EXTENSIONS

When stem extension requirement is indicated in Valve Data Sheet, the valves shall have the following provisions.

a. Valves provided with stem extension shall have water proof outer casing. Length of stem extension shall be as indicated in Valve Data Sheet. The length indicated corresponds to the distance between centerline of the valve opening and the top of mounting flange for valve operating device (gear operator/ power actuator as applicable).

b. Seat sealant injection lines shall be extended and terminated adjacent to the valve operator by means of suitable piping anchored to the valve body/ stem housing. The pipe used shall be API 5L Gr. B/ ASTM A 106 Gr. B, with Sch 160. Fittings shall be ASTM A105/ ASTM A 234 Gr. WPB, Socket welded ANSI class 6000.

c. Sealant injection lines shall be extended and terminated adjacent to the valve operator in manner as indicated in (b) above

Copyright VCS Quality Services Private Limited – All rights reserved

Digitally signed by RACHNA SHUKLA
Date: 2025.03.13 12:53:14 IST

d. Stem extension and stem housing design shall be such that the complete assembly will form a rigid unit giving positive drive under all conditions with no-possibility of free movement between valve body, stem extension or its operator.

e. Outer casing of stem extension shall have 3/8" or 1/2" NPT plugs at the top and bottom, for draining and filling with oil to prevent internal corrosion.

4.15 The valve stem shall be capable of withstanding the maximum operating torque required to operate the valve against the maximum differential pressure as per the appropriate class. The combined stress shall not exceed the maximum allowable stresses specified in the ASME Section VIII Div 1.

For Power Actuated Valves, the valve stem shall be designed for maximum output torque of the selected power actuator (including gear box, if any) at the valves stem

The valve stem shall have anti-blowout feature with antistatic device. The valve stem may be integral with plug or be a separate component.

4.16 OPERATING DEVICES

a. Valves shall have a power actuator or manual operator as indicated in the Valve Data Sheet. In case of manual operator, valve sizes, DN ≤ 100 mm (4") shall be wrench operated and valve sizes, DN ≥ 150 mm (6") shall be gear operated. Each wrench operated valve shall be supplied with wrench. Valve design shall be such that damage due to malfunctioning of the operator or its controls will only occur in the operator gear train or power cylinder and that damaged parts can be replaced without the valve cover being removed.

b. The power actuator shall be in accordance with the Company Specification issued for the purpose and as indicated in the Valve and Actuator Data Sheet. Operating time shall be as indicated in Valve Data Sheet. Valve operating time shall correspond to full close to full open/ full open to full close under maximum differential pressure corresponding to the valve rating. For actuated valves, the actuator's rated torque output shall be at least 1.25 times the break torque required to operate the valve under the maximum differential pressure corresponding to the valve class rating.

c. For the manual operator of all valves, the diameter of the hand wheel or the length of operating wrench shall be such that under the maximum differential pressure, the total force required to operate the valve does not exceed 350N. Manufacturer shall also indicate the number of turns of hand wheel (In case of gear operators) required for operating the valve from full open to full close position. Operating device shall be designed for easy operation of valve under maximum differential pressure corresponding to the valve rating

d. Direction of operation of hand wheel or wrench shall be in clock-wise direction while closing the valve. Hand wheels shall not have protruding spokes.

e. Gear operators, when provided, shall have a self-locking provision and shall be fully encased in water proof/ splash proof enclosure and shall be filled with suitable grease.

4.17 WELDING

All welds shall be made by welders and welding procedures qualified in accordance with the provisions of ASME Section IX, except that only positions 5G and 2G shall qualify all-positional welding. The procedure qualification shall also include impact test and hardness test when

Copyright VCS Quality Services Private Limited – All rights reserved

Digitally signed by RACHNA SHUKLA
Date: 2025.03.13 12:53:14 IST

required as per Clause 3.4 and 3.5 of this specification and shall meet the requirements as specified therein.

4.18 REPAIR WELDING

Repair by welding is not permitted for fabricated and forged body valves. However repair by welding as per ASME B16.34 is permitted for cast body valves. Such repairs shall be carried out at casting supplier's care only. Repair shall be carried out before any heat treatment of casting is done. Repair welding procedure qualification shall also include impact test and hardness test when required as per Clause 3.4 and 3.5 of this specification and shall meet the requirements as specified therein.

4.19 The tolerance on internal diameter and out of roundness at the ends for welded ends valves shall be as per connected pipe specification as indicated in the Valve Data Sheet

5.0 INSPECTION AND TESTS

5.1 The Manufacturer shall perform all inspection and tests as per the requirements of this specification and the relevant codes, prior to shipment, at his works. Such inspection and tests shall be, but not limited to, the following:

5.2 All valves shall be visually inspected. The internal and external surfaces of the valves shall be free from any strikes, gouges and other detrimental defects. The surfaces shall be thoroughly cleaned and free from dirt, rust and scales.

5.3 Dimensional check on all valves shall be carried out as per the Company approved drawings.

5.4 Chemical composition and mechanical properties shall be checked as per this specification and relevant material standards, for each heat of steel used.

5.5 Non-destructive examination of individual valve material and component consisting of but not limited to castings, forgings, plates and assembly welds shall be carried out by the Manufacturer.

a. Valve castings of all valves shall be radiographically examined at the cover and body portion, seat location, flanged body ends and circumference of ends to be field welded as per ASME B 16.34. Procedure and acceptance criteria shall be as per ASME B 16.34. The extent of the radiography shall be as under:

PRESSURE CLASS RATING	VALVE SIZE	EXTENT OF RADIOGRAPHY
ANSI 150 # Class	All Sizes	Nil
ANSI 300 # Class	≤ DN 400 mm (16") ≤ DN 450 mm (18”)	Nil 100%
ANSI 600 # Class above	All Sizes	100%

All castings shall be wet magnetic particle inspected 100% of the internal surfaces. Method and acceptance shall, comply with ASME B 16.34.

Copyright VCS Quality Services Private Limited – All rights reserved

Digitally signed by RACHNA SHUKLA
Date: 2025.03.13 12:53:14 IST

b. All forgings shall be by ultrasonic method. Inspection procedure and acceptance shall comply with Annexure E of ASME B16.34.

5.6 Areas, which in Company's opinion cannot be inspected, by radiographic methods, shall be checked by ultrasonic or magnetic particle methods and acceptance criteria shall be as per ASME Sec. VIII (2007 edition), Division 1, Appendix 12 and Appendix 6 respectively.

5.7 Weld ends of all cast valves subject to welding in field shall be 100% radiographically examined and acceptance criteria shall be as per ASME B16.34.

After final machining, all bevel surfaces shall be inspected by dye penetrate or wet magnetic particle methods. All defects longer than 6.35 mm are rejected, as are the defects between 6.35 mm and 1.59 mm that are separated by a distance less than 50 times their greatest length. Rejectable defects must be removed. Weld repair of bevel surface is not permitted.

All finished wrought weld ends subject to welding in field shall be 100% ultrasonically tested for lamination type defects for a distance of 50 mm from the end. Laminations shall not be acceptable.

5.8 All valves shall be tested in compliance with the requirements of API 6D. The drain, vent and sealant lines shall be either included in the hydrostatic shell test or tested independently. Test pressure shall be held for duration mentioned in API 6D. Hydrostatic shell testing shall ensure that the whole of the shell is subjected to the test pressure. If necessary, the empty shell shall be pressure tested prior to assembly of the plug. The drain, vent and sealant lines shall be either included in the hydrostatic shell test or tested independently

5.9 No leakage is permissible during hydrostatic testing. After pressure testing and acceptance, valves shall be thoroughly drained and dried. Drying of valves internal shall be with compressed air and lint free rags. The internal surfaces shall be coated with suitable water dispelling anti-corrosion fluid. To ensure total coverage, the valve shall be placed in the half open position, filled with the fluid and drained.

5.10 A supplementary air seat test as per API 6D shall be carried out for all valves. No leakage is allowed. Test pressure shall be held for at least 15 minutes.

5.11 Manufacturer who intends bidding must submit at bid stage, certificate and report for successful fire safe tests for all types of valves in accordance with BS:6755 (Part-II)/ API 6FA, as applicable in Valve Data Sheet. Failure to comply with the requirement shall be a cause of rejection of the offer

5.12 Valves shall be subjected to an Operational Torque Test as per API 6D under hydraulic pressure equal to maximum differential pressure corresponding to the applicable ANSI class rating of valve. For manually operated valves, testing shall confirm that the torque required to operate the valve does not exceed 4.16 (c) of this specification.

5.13 Power actuated valves shall be tested after assembly of the valve and actuator, at the valve Manufacturer's works. At least five Open-Close-Open cycles without internal pressure and five Open-Close-Open cycles with maximum differential pressure corresponding to the valve rating shall be performed on the valve actuator assembly. The time for Full Open to Full Close shall be

Copyright VCS Quality Services Private Limited – All rights reserved

Digitally signed by RACHNA SHUKLA
Date: 2025.03.13 12:53:14 IST

recorded during testing. If required, the actuator shall be adjusted to ensure that the opening and closing time is within the limits stated in Valve Data Sheet.

Hand operator provided on the actuator shall also be checked after above cyclic testing, for satisfactory manual over-ride performance.

These tests shall be conducted on minimum one valve out of a lot of five (5) valves of the same size, rating and the actuator model/ type. In case, the tests do not meet the requirements, retesting/ rejection of the lot shall be decided by the Company's Inspector.

5.14 Company reserves the right to perform stage wise inspection and witness tests as indicated in clause 5.1 above at Manufacturer's works prior to shipment. Manufacturer shall give reasonable access and facilities required for inspection to the Company's Inspector. Company reserves the right to require additional testing at any time to confirm or further investigate a suspected fault. The cost incurred shall be to Manufacturer's account.

In no case shall any action of Company or his inspector shall relieve the Manufacturer of his responsibility for material, design, quality or operation of valves.

Inspection and tests performed/ witnessed by the Company's Inspector shall in no way relieve the Manufacturer's obligation to perform the required inspection and tests.

6.0 TEST CERTIFICATES

Manufacturer shall submit the following certificates in accordance with EN10204 3.2.

a. Mill test certificates relevant to the chemical analysis and mechanical properties of the materials used for the valve construction as per the relevant standards.
b. Report on heat treatment carried out.
c. Test certificates of hydrostatic and pneumatic tests complete with records of timing and pressure of each test.
d. Test reports of radiograph and ultrasonic inspection, MPI and DP Inspection.
e. Test report on operation of valves conforming to clause 5.0 of this specification.
f. All other test reports and certificates as required by API 6D and this specification.

The certificates shall be considered valid only when signed by Company's Inspector. Only those valves which have been certified by Company's Inspector shall be dispatched from Manufacturer's works.

7.0 PAINTING

Valve surface shall be thoroughly cleaned, freed from rust and grease and applied with sufficient coats of corrosion resistant paint. Surface preparation shall be carried out by shot blasting to SP-6 in accordance with "Steel Structures Painting Council - Visual Standard SSPC-VIS-1". For the valves to be installed underground, when indicated in Valve Data Sheet, the external surfaces of buried portion of the valve shall be painted with three coats of suitable coal tar epoxy resin with a minimum dry film thickness of 300 microns.

Copyright VCS Quality Services Private Limited – All rights reserved

Digitally signed by RACHNA SHUKLA
Date: 2025.03.13 12:53:14 IST

Manufacturer shall indicate the type of corrosion resistant paint used, in the drawings submitted for approval

8.0 MARKING & SHIPMENT

8.1 All valves shall be marked as per API 6D. The units of marking shall be metric except nominal diameter, which shall be in inches. Marking shall be done by die-stamping on the bonnet or on the housing. However, for buried valves the marking shall be done on the above ground portion of the stem housing only.

8.2 Valve ends shall be suitably protected to avoid any damage during transit. All threaded and machined surfaces subject to corrosion shall be well protected by a coat of grease or other suitable material. All valves shall be provided with suitable protectors for flange faces, securely attached to the valves. Bevel ends shall be protected with metallic or high impact plastic bevel protectors.

8.3 All sealant lines and other cavities of the valve shall be filled with sealant before shipment.

8.4 Packaging and shipping instructions shall be as per API 6D.

8.5 On packages, following shall be marked legibly with suitable marking ink:

a. Order Number
b. Manufacturer's Name
c. Valve size and rating
d. Tag Number
e. Serial Number

9.0 SPARES AND ACCESSORIES

9.1 Manufacturer shall furnish list of recommended spares and accessories for valves required during start-up and commissioning and supply of such spares shall be included in the price quoted by Manufacturer.

9.2 Manufacturer shall furnish list of recommended spares and accessories required for two years of normal operation and maintenance of valves and price for such spares shall be quoted separately.

10.0 DOCUMENTATION

10.1. The Manufacturer shall supply documentation in accordance with the Vendor Data Requirements List (VDRL) as attached with Purchase Order/ Material requisition. If not mentioned below minimum documentation shall be followed.

At the time of bidding, the bidder shall submit the following documents:

a) General arrangement/ assembly drawings showing all features and relative positions & sizes of vents, drains, gear box & other external parts together with overall dimensions.

Copyright VCS Quality Services Private Limited – All rights reserved

Digitally signed by RACHNA SHUKLA
Date: 2025.03.13 12:53:14 IST

b) Sectional drawing showing major parts with reference numbers and material specification.
c) Reference list of similar plug valves manufactured and supplied in last five years, indicating all relevant details including project, year, client, location, size rating, service, etc.
d) Torque curves for the power actuated valves along with break torque and maximum allowable stem torque. In addition, sizing criteria and torque calculations shall also be submitted for power actuated valves.
e) Descriptive technical catalogues of the Manufacturer.
f) Copy of valid API 6D certificate, wherever applicable.
g) Details of support foot, including dimensions and distance from valve centre line to bottom of support foot.
h) Quality Assurance Plan enclosed with this tender duly signed, stamped and accepted.

The drawings to be submitted alongwith the bid shall be in total compliance with the requirement of technical specification and data sheets of the valves with no exception & deviation.

10.2. Within two weeks of placement of order, the manufacturer shall submit six copies of, but not limited to, the following drawings, documents and specifications for approval :

a) Design drawings and relevant calculations for pressure containing parts and other principle parts.

b) Detailed sectional arrangement drawing showing all parts with reference numbers and materials specification.

c) Assembly drawings with overall dimensions & clearances required and showing all features. Drawing shall also indicate the numbers of turns of handwheel (in case of gear operator) required for operating the valve from full open to full close position and the painting scheme.

d) Welding, heat treatment, testing and quality control procedures.

e) Details of corrosion resistant paint to be applied on the valves.
f) Design calculation for pressure containing parts.

Manufacture of valves shall commence only after approval of the above documents. Once approval has been given by Purchaser, any change in design, material and method of manufacture shall be notified to the Purchaser, whose approval in writing for all changes shall be obtained before the valves are manufactured.

Copyright VCS Quality Services Private Limited – All rights reserved

Digitally signed by RACHNA SHUKLA
Date: 2025.03.13 12:53:14 IST

10.3. Within 30 days from the approval date, Manufacturer shall submit one reproducible and six copies of the approved drawings, document s and specification as listed in clause 10.2 of this specification.

10.4. Prior to shipment, Manufacturer shall submit one reproducible and six copies of following

t certificates as listed in clause 7.0 of this specification.

b) Manual for installation, erection instructions, maintenance and operation instructions, including a list of recommended spares for the valves

10.5. All documents shall be in English Language.

11.0 GUARANTEE

11.1 Manufacturer shall guarantee that the materials and machining of valves and fittings comply with the requirements in this specification and in the Purchase Order.

11.2 Manufacturer is bound to replace or repair all valve parts which should result defective due to inadequate engineering or to the quality of materials and machining.

11.3 If valve defect or malfunctioning cannot be eliminated, Manufacturer shall replace the valve without delay.

11.4 Any defect occurring during the period of Guarantee shall be attended to by making all necessary modifications and repair of defective parts free of charge to the Purchaser as per the relevant clause of the bid document.

11.5 All expenses shall be to Manufacturer's account.

Copyright VCS Quality Services Private Limited – All rights reserved

Digitally signed by RACHNA SHUKLA
Date: 2025.03.13 12:53:14 IST

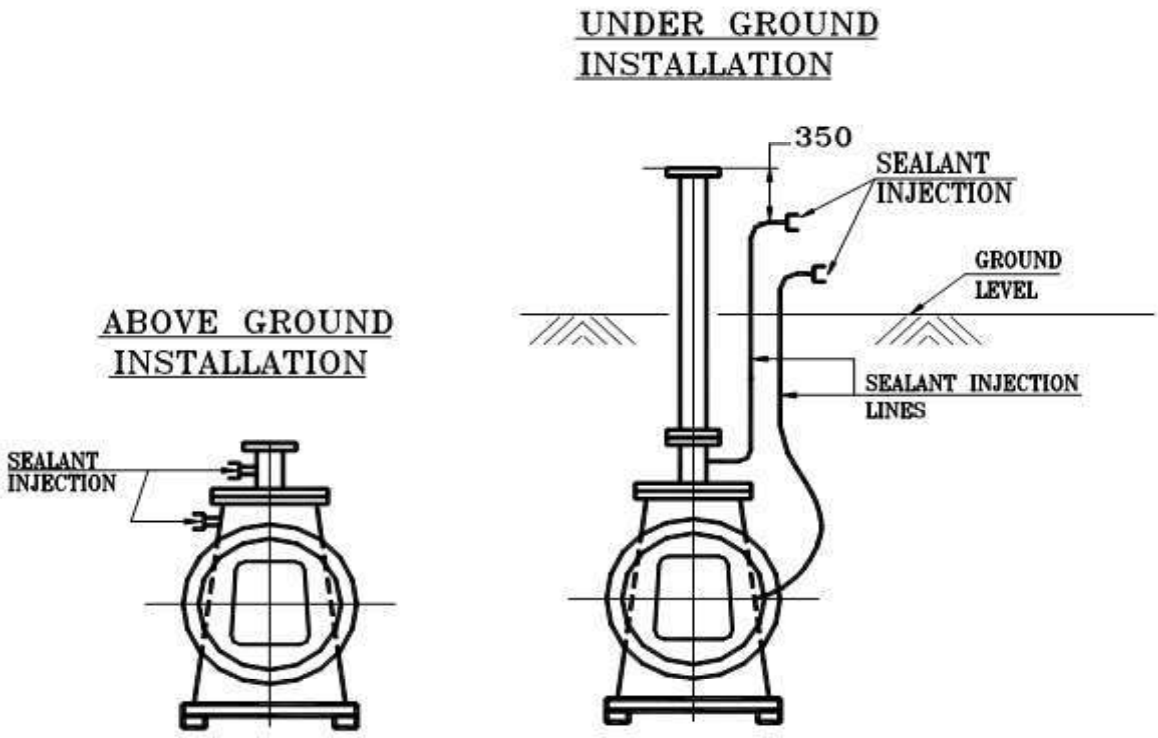

FIGURE- 4.6

Copyright VCS Quality Services Private Limited – All rights reserved

Digitally signed by RACHNA SHUKLA
Date: 2025.03.13 12:53:14 IST

VCS Quality Services Pvt. Ltd.

STANDARD SPECIFICATION

FOR
INSPECTION, FLUSHING & TESTING
OF PIPING SYSTEM

VCS – SS – PP - 2501

Rev. No	Date	Prepared By	Checked By	Approved By	Authorized By
01	27.01.2022	SR	MC	HK	GW

UNCONTROLLED COPY	:	If printed
CONTROLLED COPY	:	If in soft and signed

Copyright VCS Quality Services Private Limited – All rights reserved

Digitally signed by RACHNA SHUKLA
Date: 2025.03.13 12:53:14 IST

REVISION RECORD						
Rev.	**Revision Date**	**Prepared by**	**Checked by**	**Approved by**	**Authorized by**	**Revision Description**
00	12.10.2019					
		MB	AK	AD	SK	
01	27.01.2022					VCS QMS Integration
		SR	MC	HK	GW	

Copyright VCS Quality Services Private Limited– All rights reserved

Digitally signed by RACHNA SHUKLA
Date: 2025.03.13 12:53:14 IST

ABBREVIATIONS:

ASME	American Society of Mechanical Engineers
ASTM	American Society of Testing of Materials
API	American Petroleum Institute
LPG	Liquefied Petroleum Gas

Copyright VCS Quality Services Private Limited– All rights reserved

Digitally signed by RACHNA SHUKLA
Date: 2025.03.13 12:53:14 IST

CONTENTS

1.0 SCOPE 4

2.0 REFERENCE CODES, STANDARDS AND SPECIFICATIONS 4

3.0 INSPECTION 4

4.0 FLUSHING 4

5.0 EXTENT OF TESTING 5

Copyright VCS Quality Services Private Limited– All rights reserved

Digitally signed by RACHNA SHUKLA
Date: 2025.03.13 12:53:14 IST

1.0 SCOPE

This specification covers the general requirements for inspection, flushing and testing of piping systems.
Flushing and testing of all piping systems shall be witnessed by the Company Representative.

2.0 REFERENCE CODES, STANDARDS AND SPECIFICATIONS

Reference has been made in this specification to the latest edition (edition in force at the time of floating the enquiry) of the following codes.

AMERICAN SOCIETY OF MECHANICAL ENGINEERS (ASME)

B31.4 : Pipeline Transportation system for liquids and Slurries
B31.8 : Gas Transmission and Distribution Piping Systems. B31.3
: Process piping

3.0 INSPECTION

During various stages and after completion of fabrication and erection, the piping system shall be inspected by the Company representative to ensure that:

- Proper piping material has been used.
- Piping has been erected as per drawings and instructions.
- All supports have been installed correctly.
- Test preparations mentioned in this specification have been carried out.

4.0 FLUSHING

- Flushing of all lines shall be done before pressure testing.
- Flushing shall be done by `fresh potable water' or by dry compressed air wherever water flushing is not desirable to clean the pipe of all dirt, debris or loose foreign material.
- Required pressure for water flushing shall meet the fire hydrant pressure or utility water pressure. For air flushing, the line/ system shall be pressurized by compressed air at the required pressure which shall be 50 psi maximum. The pressure shall then be released by quick opening of a valve, already in line or installed temporarily for this purpose. This procedure shall be repeated as many times as required till the inside of the pipe is fully cleaned.
- In line instruments like control valves, orifice plates, rotameters, safety valves and other instruments like thermowells which may interfere with flushing shall not be included in flushing circuit.
- The screens/ meshes shall be removed from all permanent strainers before flushing. Screens/ meshes shall be reinstalled after flushing but before testing.
- During flushing temporary strainers shall be retained. These shall be removed, cleaned and reinstalled after flushing, but, before testing.
- In case any equipment such as Filter, Scrubbers column, vessel etc. form part of

Copyright VCS Quality Services Private Limited– All rights reserved

Digitally signed by RACHNA SHUKLA
Date: 2025.03.13 12:53:14 IST

piping circuit during flushing, this shall be done with the approval of Company representative. However, equipments thus included in the circuit shall be completely drained and dried with compressed air after flushing is completed.

- During flushing discharged water/ air shall be drained to the place directed by the
- Company representative. If necessary, proper temporary drainage shall be provided by the contractor.
- Care shall be taken during flushing so as not to damage/ spoil work of other agencies. Precautions shall also be taken to prevent entry of water/ foreign matter into equipment's, electric motors, instruments, electrical installations etc. in the vicinity of lines being flushed.
- The contractor shall carry out all the activities required before, during and after the flushing operation, arising because of flushing requirements, such as but not limited to the following:
- Dropping of valves, specials, distance pieces, inline instruments and any other piping part before flushing. The flanges to be disengaged for this purpose shall be envisaged by the contractor and approved by the Company representative. These flanges shall be provided with temporary gaskets at the time of flushing.
- After flushing is completed and approved, the valve distance pieces, piping specials etc. shall be reinstalled by the contractor with permanent gaskets. However, flanges at equipment nozzles and other places where isolation is required during testing, only temporary gaskets shall be provided.

5.0 EXTENT OF TESTING

- With the exclusion of instrumentation, piping systems fabricated or assembled in the field shall be tested irrespective of whether or not they have been pressure tested prior to site welding or fabrication.
- To facilitate the testing of piping systems, vessels and other equipments may be included in the system with the prior approval of Company representative if the test pressure specified is equal to or less than that for the vessels and other equipments.
- Pumps, compressors and other rotary equipments shall not be subjected to field test pressure. Lines which are directly open to atmosphere such as vents, drains, safety valves discharge need not be tested, but all joints shall be visually inspected. Wherever necessary, such lines shall be tested by continuous flow of fluid to eliminate the possibility of blockage.
- However, such lines if provided with block valve shall be pressure tested up to the last block valve.
- Seats of all valves shall not be subjected to a pressure in excess of the maximum cold working pressure of the valve. Test pressure applied to valves shall not be greater than the manufacturer's recommendation nor less than that required by the applicable code. Where allowable seat pressure is less than test pressure, test shall be made through an open valve.

Copyright VCS Quality Services Private Limited– All rights reserved

Digitally signed by RACHNA SHUKLA
Date: 2025.03.13 12:53:14 IST

- Instruments in the system to be tested shall be excluded from the test by isolation or removals, unless approved otherwise by the Company representative. Restrictions which interfere with filling, venting, draining such 'as orifice plates etc. shall not be installed unless testing is complete.
- Control valves shall not be included in the test system. Where bypasses are provided test shall be performed through the bypass and/ or necessary spool shall be used in place of the control valve.
- Pressure gauges which are part of the finished system, but cannot withstand test pressure shall not be installed until the system has been tested. Where piping systems to be tested are directly connected at the battery limits to piping for which the responsibility-rests with other agencies, the piping to be tested shall be isolated from such piping by physical disconnection such as valve or blinds.

5.1 GENERAL REQUIREMENTS / TEST-PREPARATION FOR TESTING

- Testing shall be carried out with permanent gaskets installed unless specified otherwise or instructed by the Company representative.
- No pressure test shall be carried out against closed valve unless approved by the
- Company representative.
- The Company representative shall be notified in advance by the Contractor, of the testing sequence and programme, to enable him to be present for witnessing the test.
- Before testing, all piping shall be cleaned by flushing to make it free from dirt, loose scale, debris and other loose foreign materials.
- All piping systems to be hydrostatically tested shall be vented at the high points and the systems purged of air before the test pressure is applied.
- Wherever in the line any void exists due to any reasons, like absence of control valves, safety valves, check valves etc. it shall be fitted with temporary spools.
- All joints welded, screwed or flanged shall be left exposed for examination during the test.Before pressurizing the lines, each weld joint shall be cleaned by wire brush to free it from -rust and any other foreign matter.
- Where a system is to be isolated at a pair of companion flanges, a blank shall be inserted between the companion flanges. Minimum thickness of the blank shall be designed in accordance with applicable design code.
- Open ends of piping system where blanks cannot be used, such as pumps, compressors, turbines or wherever equipment or pipe spools have been recovered or disconnected prior to hydrostatic testing, shall be blinded off by using standard blind flanges of same rating as the piping system being tested.
- Pressure gauges used in testing shall be installed as close as possible to the lowest point in the piping system to be tested, to avoid overstressing of any of the lower portions of the system.

Copyright VCS Quality Services Private Limited– All rights reserved

Digitally signed by RACHNA SHUKLA
Date: 2025.03.13 12:53:14 IST

- For longer lines and vertical lines, two or more pressure gauges shall be installed at locations decided by the Company representative.
- For lines containing check valves any of the following alternatives shall be adopted for pressure testing:
- Whenever possible pressurize up-stream side of valve.
- Replace the valve by a temporary spool and reinstall the valve after testing.
- Provide blind on valve flanges and test the upstream and downstream of the line separately and remove the blind after testing. At these flanges, temporary gaskets shall be provided during testing and shall be replaced by-permanent gaskets subsequently.
- For check valves in lines 1 1/2" and below flapper or seat shall be removed during testing (if possible). After completion of testing the flapper/ seat shall be refitted.
- Gas lines when hydrostatically tested shall be provided with additional temporary supports during testing as directed by the Company representative.
- Piping which is spring or counter-weight supported shall be temporarily supported, where the weight of the fluid would overload the support. Retaining pins for spring supports shall be removed only after testing is completed and test fluid is completely drained.
- When testing any piping system, air or steam of approximately 2 kg/ cm^2g may be used as preliminary test to detect missing gaskets etc. as this avoids the necessity of draining the line to make repairs. However, steam shall not be used for this purpose, if the steam temperature is more than the design temperature of the line.
- For jacketed pipes testing of core pipes shall be done on individual pieces where the pipe is continuously jacketed, before it is jacketed. The outer jacket shall be tested separately as a system. For piping with discontinuous jacketing, the core pipe and the jacket shall be tested as separate continuous systems.

5.2 TESTING MEDIA, TEST PRESSURE AND TEST PRESSURE GAUGES

5.2.1 TESTING MEDIA

In general, all pressure tests shall be hydrostatic using iron free water, which is clean and free of silt. Maximum chloride content in water for hydrostatic testing for SS piping shall be 15-20 ppm.

Air shall be used for testing only if water would cause corrosion of the system or overloading of supports etc. in special cases as directed by Company representative.

If operating fluid in the line is much lighter than testing fluid, the additional weight of testing fluid may render piping supports (as designed) inadequate. This will call for additional temporary supports. The typical examples are flare and vapour lines. It is preferable that hydrostatic testing is avoided in such systems and instead pneumatic testing may be specified.

Where air/ water tests are undesirable, substitute fluids such as gas oil, kerosene, methanol etc. shall be used as the testing medium, with due consideration to the hazards

Copyright VCS Quality Services Private Limited– All rights reserved

Digitally signed by RACHNA SHUKLA
Date: 2025.03.13 12:53:14 IST

involved. These test fluids shall be specified in the line list given to the contractor.

5.2.2 TEST PRESSURE

The hydrostatic/ pneumatic test. pressure shall be as indicated in the line list or as per the instruction of Company representative.
The selection of the piping system for one individual test shall be based on the following:

- Test pressure required as per line list. Maximum allowable pressure for the material of construction of piping.
- Depending upon the above-requirements and based on construction progress, maximum length of piping shall be included in each test.

5.2.3 TEST PRESSURE GAUGE

All gauges used for field; testing shall have suitable range so that the test pressure of various systems falls in 35% to 65% of gauge scale range. Pressure gage dial shall be minimum of 150 mm. Size of Bourdon shall not be less than 75% of nominal diameter of dial range. Gauge shall be of a good quality and in first class working condition.
Prior to the start of any test or periodically during the field test programme, all test gauges shall be calibrated using a standard dead weight gauge tester or other suitable approved testing apparatus. Any gauge showing an incorrect zero reading or error of more than ± 2% of full-scale range shall be discarded. The Company representative shall check the accuracy of master pressure gauge used for calibration. Calibration certificate shall be furnished for the pressure gauges.

5.3 TESTING PROCEDURE

5.3.1 HYDROSTATIC TEST

All vents and other connections used as vents shall be left open while filling the line with test fluid for complete removal of air. In all lines for pressurizing and depressurizing the system, temporary isolation valves shall be provided if valved vents, drains do not exist in the system.
Pressure shall be applied only after the system/ line is ready and approved by the Company representative.
Pressure shall be applied by means of a suitable test pump or other-pressure source which shall be isolated from the system as soon as test pressure is reached and stabilized in the system.
A pressure gauge shall be provided at the pump discharge for guidance in bringing the system to the required pressure.
The pump shall be attended constantly during the test by an authorized person. The pump shall be isolated from the system whenever the pump is to be left unattended.
Test pressure shall be maintained for a sufficient length of time to permit thorough inspection of all joints for leakage or signs of failure. Any joint found leaking during a

Copyright VCS Quality Services Private Limited– All rights reserved

Digitally signed by RACHNA SHUKLA
Date: 2025.03.13 12:53:14 IST

pressure test shall be retested to the specified pressure after repair. Test period shall be maintained for a minimum of four hours.
The pump and the piping system to be tested are to be provided with separate pressure indicating test gauges.
Care shall be taken to avoid increase in the pressure due to temperature variation during the test.

5.3.2 PNEUMATIC TEST

When testing with air, pressure shall be supplied by means of a compressor. The compressor shall be portable type with a receiver, after cooler and oil separator.
Piping to be tested by air shall have joints covered with a soap and water solution so that the joints can be examined for leaks.
All other details shall be same as per hydrostatic testing procedure (specified above).

5.4 COMPLETION OF TESTING

After the hydrostatic test has been completed, pressure shall be released by opening the vents, in a manner and at a rate so as not to endanger personnel or damage equipments. All vents shall be opened before the system is to be drained and shall remain open till all draining is complete, so as to prevent formation of vacuum in the system. After draining, lines/ systems shall be dried by air. In services like dry air, ethylene etc., small traces of water can cause problem. For such lines hot air drying is to be done after hydro test.
After testing is completed the test blinds shall be removed and equipment/ piping isolated during testing shall be connected using the specified gaskets, bolts and nuts. These connections shall be checked for tightness in subsequent pneumatic tests to be carried out by the contractor for complete loop/ circuit including equipments (except rotary equipments).
Pressure test shall be considered complete only after approved by the Company representative. Defects, if any, noticed during testing shall be rectified immediately and retesting of the system/ line shall be done by the contractor at his cost.

5.5 TEST RECORDS

Records in triplicate shall be prepared and submitted by the contractor for each piping system, for the pressure test done in the Performa provided/ approved by the Company representative.

Copyright VCS Quality Services Private Limited– All rights reserved

Digitally signed by RACHNA SHUKLA
Date: 2025.03.13 12:53:14 IST

VCS QUALITY SERVICES PVT. LTD.

STANDARD SPECIFICATION

FOR
PAINTING

VCS – SS – PP - 2502

Rev. No	Date	Prepared By	Checked By	Approved By	Authorized By
04	30.06.2022	RP	MC	HK	GW
03	28.01.2020	MB	AK	AD	SK
02	19.02.2018	ADE	RNR	AD	SK
01	15.05.2017	ADE	RNR	AD	SK

UNCONTROLLED COPY	:	If printed
CONTROLLED COPY	:	If in soft and signed

Copyright VCS Quality Services Private Limited – All rights reserved

Digitally signed by RACHNA SHUKLA
Date: 2025.03.13 12:53:14 IST

REVISION RECORD						
Rev.	**Revision Date**	**Prepared by**	**Checked by**	**Approved by**	**Authorized by**	**Revision Description**
00	15.05.2017					
		AS	SM	AD	SK	
01	09.02.2018					
		ADE	RNR	AD	SK	
02	10.04.2018					
		ADE	RNR	AD	SK	
03	28.01.2020					Format change. Doc Number Change from SS-PI-008 to VCS-SS-PP-2502
		MB	AK	AD	SK	
04	30.06.2022					VCS QMS Integration
		RP	MC	HK	GW	

Copyright VCS Quality Services Private Limited – All rights reserved

Digitally signed by RACHNA SHUKLA
Date: 2025.03.13 12:53:14 IST

CONTENTS

1.0 GENERAL 2

2.0 CODES & STANDARDS 4

3.0 CONDITIONS OF DELIVERY 6

4.0 COMPOSITION OF THE PAINT PRODUCTS USED 6

5.0 IDENTIFICATION 7

6.0 SURFACE PREPARATION STANDARDS 8

7.0 PREPARATION OF THE SURFACES 8

8.0 METALLISATION.....16

9.0 CARRYING OUT THE PAINTWORK 16

Copyright VCS Quality Services Private Limited – All rights reserved

Digitally signed by RACHNA SHUKLA
Date: 2025.03.13 12:53:14 IST

1.0 GENERAL

1.1 This technical specification shall be applicable for the work covered by the contract, and without prejudice to the provisions of various codes of practice, standard specifications etc. It is understood that contractor shall carry out the work in all respects with the best quality of materials and workmanship and in accordance with the best engineering practice and instructions of Engineer-In-Charge.

Wherever it is stated in the specification that a specific material is to be supplied or a specific work is to be done, it shall be deemed that the same shall be supplied or carried out by the contractor. Any deviation from this standard without written deviation permit from appropriate authority will result in rejection of job.

1.2 SCOPE

1.2.1 Scope of work covered in the specification shall include, without being limited to the following.

1.2.2 This specification defines the requirements for surface preparation, selection and application of primers and paints on external surfaces of equipment, vessels, machinery, piping, ducts, steel structures, external & internal protection of storage tanks for all services, MS Chimney without Refractory lining and Flare lines etc. The items listed in the heading of tables of paint systems is indicative only, however, the contractor is fully responsible for carrying out all the necessary painting, coating and lining on external and internal surfaces as per the tender requirement.

1.2.3 Extent of Work

1.2.3.1 The following surfaces and materials shall require shop, pre-erection and field painting:

a. All un-insulated C.S. & A.S. equipment like columns, vessels, drums, storage tanks (both external & internal surfaces), heat exchangers, pumps, compressors, electrical panels and motors etc.

b. All un-insulated carbon and low alloy piping, fittings and valves (including painting of identification marks), furnace ducts and stacks.

c. All items contained in a package unit as necessary.

d. All structural steel work, pipe, structural steel supports, walkways, handrails, ladders, platforms etc.

e. Flare lines, external surfaces of MS chimney with or without refractory lining and internal surfaces of MS chimney without refractory lining.

Copyright VCS Quality Services Private Limited – All rights reserved

Digitally signed by RACHNA SHUKLA
Date: 2025.03.13 12:53:14 IST

f. Identification colour bands on all piping as required including insulated aluminium clad, galvanised, SS and nonferrous piping.

g. Identification lettering/numbering on all painted surfaces of equipment/piping insulated aluminium clad, galvanized, SS and non-ferrous piping.

h. Marking / identification signs on painted surfaces of equipment/piping including hazardous service.

i. Supply of all primers, paints and all other materials required for painting (other than Owner supplied materials)

j. Over insulation surface of equipments and pipes wherever required.

k. Painting under insulation for carbon steel, alloy steel and stainless steel as specified.

l. Painting of pre-erection/fabrication and Shop primer.

m. Repair work of damaged pre-erection/fabrication and shop primer and weld joints in the field/site before and after erection as required.

n. All CS Piping, equipments, storage tanks and internal surfaces of RCC tanks in ETP plant.

1.2.3.2 The following surfaces and materials shall not require painting in general. However, if there is any specific requirement by the owner, the same shall be painted as per the relevant specifications:

a. Un-insulated austenitic stainless steel.
b. Plastic and/or plastic coated materials
c. Non-ferrous materials like aluminum.

1.2.4 Documents

1.2.4.1 The contractor shall perform the work in accordance with the following documents issued to him for execution of work.

a. Bill of quantities for piping, equipment, machinery and structures etc.
b. Piping Line List.
e. Painting specifications including special civil defence requirements.

1.2.5 Unless otherwise instructed, final painting on pre-erection/ shop primed pipes and equipments shall be painted in the field, only after the mechanical completion, testing on systems are completed as well as after completion of steam purging wherever required.

Copyright VCS Quality Services Private Limited – All rights reserved

Digitally signed by RACHNA SHUKLA
Date: 2025.03.13 12:53:14 IST

1.2.6 Changes and deviations required for any specific job due to clients requirement or otherwise shall be referred to VCS for deviation permit.

2.0 CODES & STANDARDS

Without prejudice to the specifications of the contract, the following codes and standards shall be followed for the work covered by this contract.

IS: 5 Colors for ready mixed paints and enamels.

RAL DUTCH International Standard for colour shade (Dutch Standard)

IS: 101 Methods of test for ready mixed paints and enamels,

IS: 161 Heat resistant paints.

IS: 2074 Specifications for ready mixed paint, red oxide zinc chrome priming.

IS: 2379 Color code for identification of pipelines.

IS: 2932 Specification for enamel, synthetic, exterior (a) undercoating. (b) Finishing.

3.0 CONDITIONS OF DELIVERY

Packaging

Every recipient will be fitted with a hermetically-sealed lid with an opening that is sufficiently large to allow the contents to be stirred: the outside and inside are protected against oxidation, and, the lid, are marked with a strip of color identical to the contents.

4.0 COMPOSITION OF THE PAINT PRODUCTS USED

a) Quality

The composition and quality of the products may not differ from batch to batch. A batch is all of the products of a specified manufacture. If the analyses of products bring to light that the composition does not conform to the specifications of the paint manufacturer, the OWNER may refuse to use this batch of products. The paint products must comply with the following conditions

- They must have the viscosity necessary for the described use and the established condition: use of the brush - paint roller (spray gun only for special cases and in the workshop)

b) Quality control - Sampling

Copyright VCS Quality Services Private Limited – All rights reserved

Digitally signed by RACHNA SHUKLA
Date: 2025.03.13 12:53:14 IST

While the works are in progress on the construction site, the OWNER may carry out sampling on the paint being used for the purpose of checking conformity. The paint products must be made available free of charge to the laboratory or the approved supervisory body in sufficient quantities so that all the tests can be carried out on the same batch.

If analyses reveal a non-conformity in the composition of the products used (tolerance of $\pm$ 3 % of the dosage of every component), the OWNER may refuse application of the product under consideration, halt the work and have the nonconforming product already applied removed.

Before proceeding the work, a product that does conform will be required. The only Purpose of the analysis is to reveal any nonconformity of the composition of the products. Their purpose is therefore not to assess the quality of the different components. The analyses concerned are not acceptance tests of the products supplied and in no way affect the obligations of the contractor specified in the contract towards the OWNER.

5.0 IDENTIFICATION

Every recipient will bear the following information:

- Name of the manufacturer
- Date and number of manufactures
- Name of the product type
- Batch no
- Net weight of the produced or the contents of the recipient
- Date of the expiry.

At the time of delivery, this packaging must bear labels in conformity with the legal stipulations in force.

Leaving the site after work

After completion of a job a general clean-up shall be carried out by the Contractor to remove all debris, materials or irregularities that his work has brought to the site so that it is left tidy:

The restoration work includes among other things:

- The removal of abrasives.
- The removal of the different protective coverings.

Copyright VCS Quality Services Private Limited – All rights reserved

Digitally signed by RACHNA SHUKLA
Date: 2025.03.13 12:53:14 IST